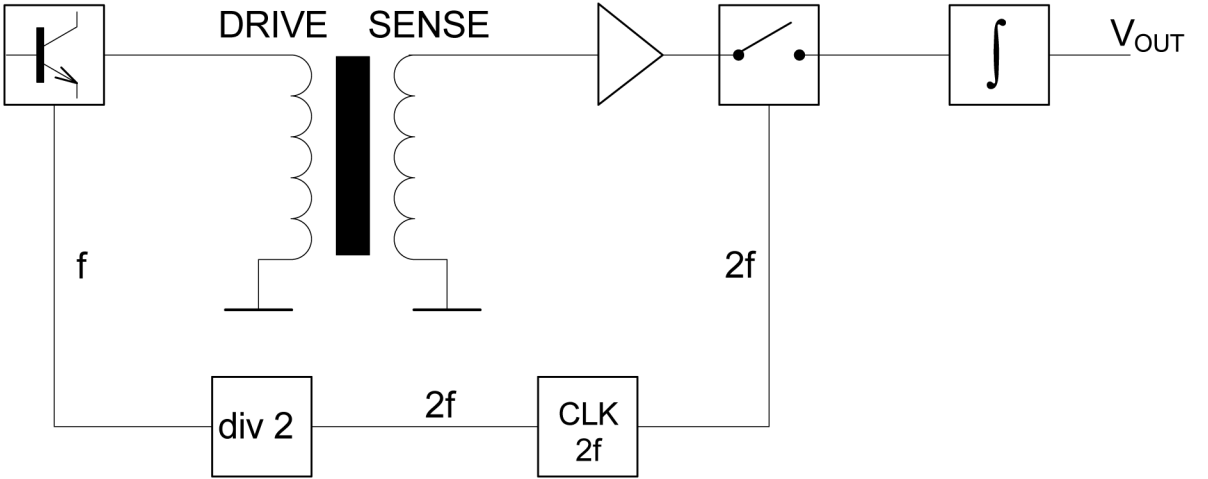
DRIVE
SENSE
V_{OUT}
f
2f
div 2
2f
CLK
2f