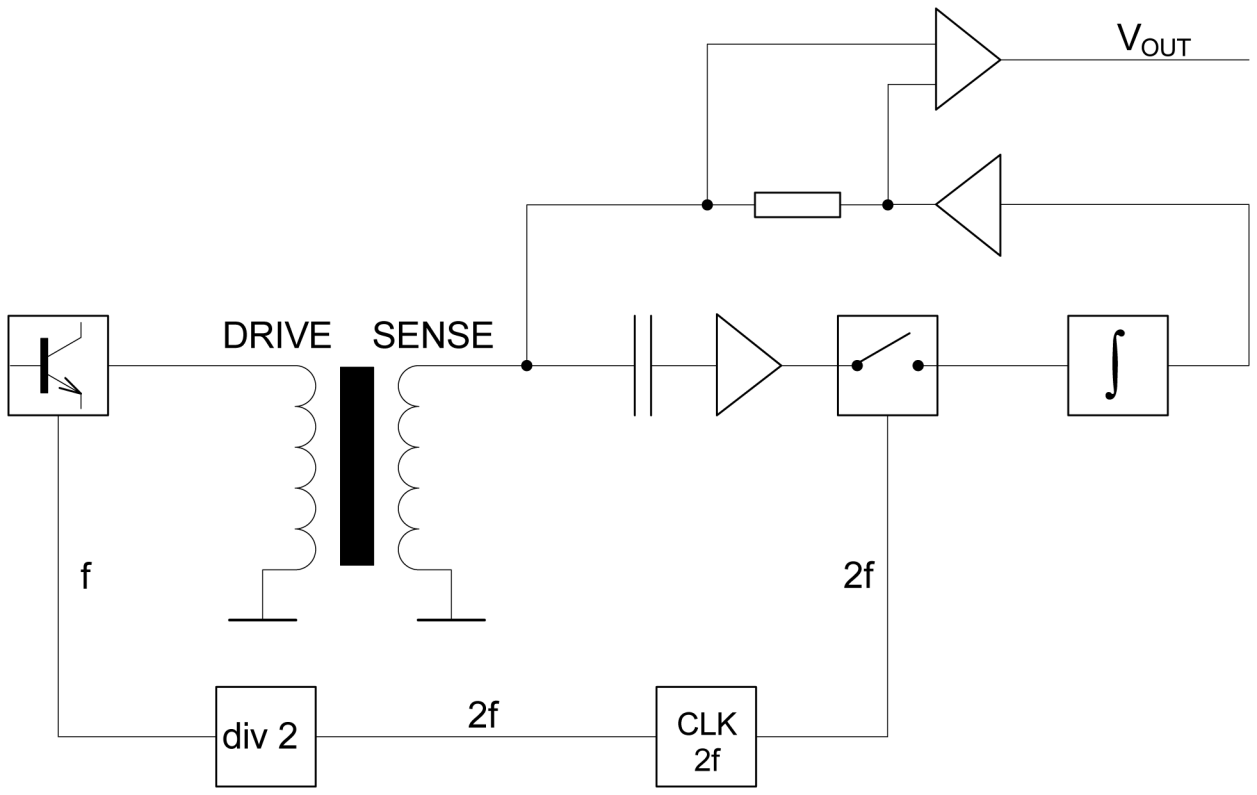
$V_{OUT}$
DRIVE
SENSE
f
2f
div 2
2f
CLK
2f