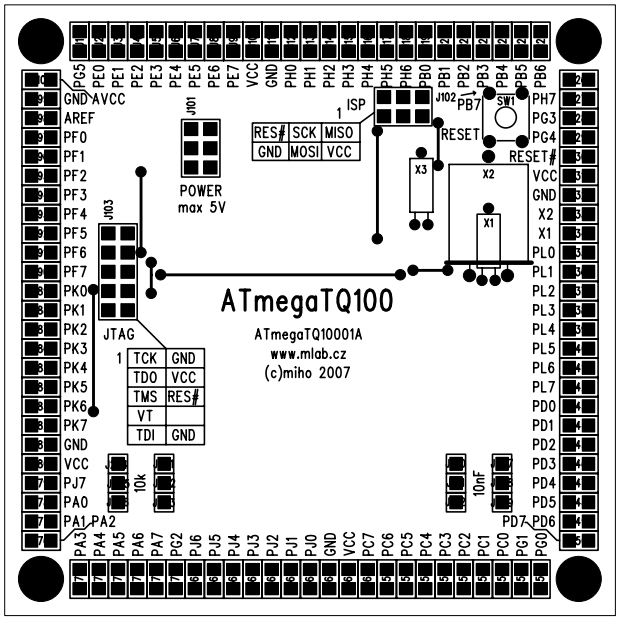
ATmegaTQ100
ATmegaTQ10001A
www.mlab.cz
(c)miho 2007
POWER
max 5V
ISP
RES# SCK MISO
GND MOSI VCC
RESET
JTAG
TCK GND
TDO VCC
TMS RES#
VT
TDI GND
10k
10nF
J101
J102
J103
SW1
X1
X2
X3

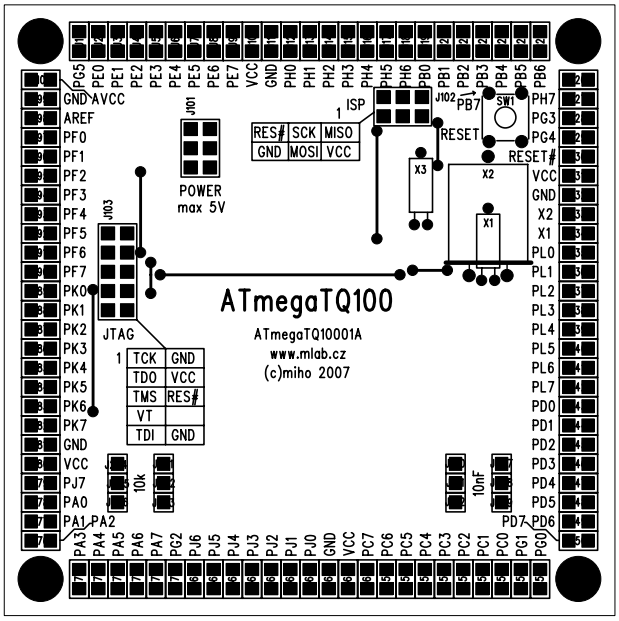
ATmegaTQ100
ATmegaTQ10001A
www.mlab.cz
(c)miho 2007
POWER
max 5V
ISP
RES# SCK MISO
GND MOSI VCC
RESET
JTAG
TCK GND
TDO VCC
TMS RES#
VT
TDI GND
10k
10nF
J101
J102
J103
SW1
X1
X2
X3

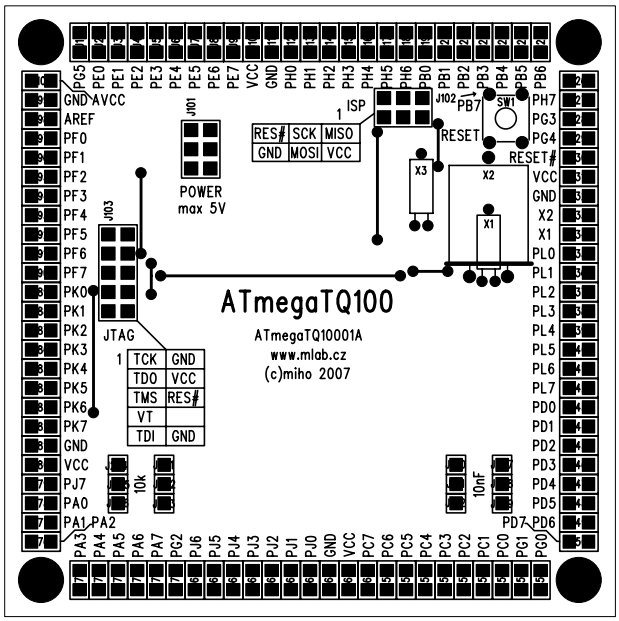
ATmegaTQ100
ATmegaTQ10001A
www.mlab.cz
(c)miho 2007
POWER
max 5V
ISP
RES# SCK MISO
GND MOSI VCC
RESET
JTAG
TCK GND
TDO VCC
TMS RES#
VT
TDI GND
10k
10nF
J101
J102
J103
SW1
X1
X2
X3

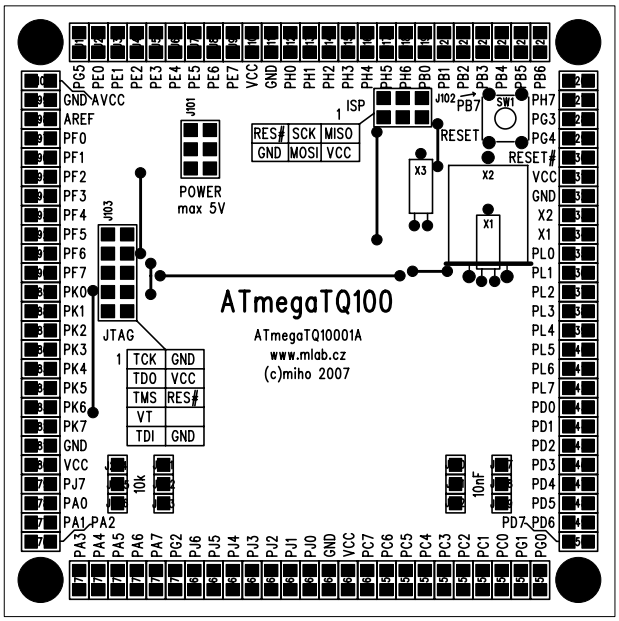
ATmegaTQ100
ATmegaTQ10001A
www.mlab.cz
(c)miho 2007
POWER
max 5V
ISP
RES# SCK MISO
GND MOSI VCC
RESET
JTAG
TCK GND
TDO VCC
TMS RES#
VT
TDI GND
10k
10nF
J101
J102
J103
SW1
X1
X2
X3