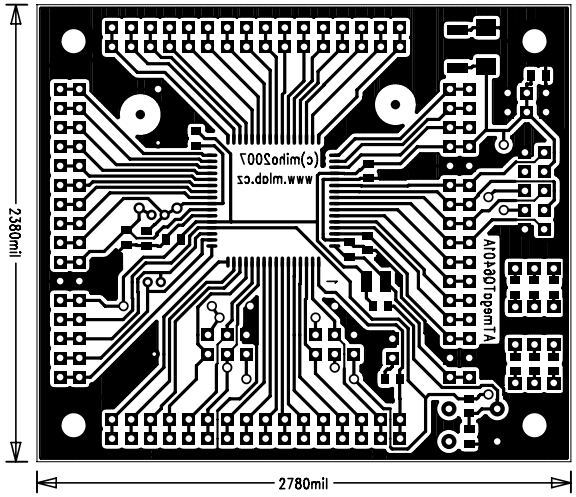
2780mil
2380mil
ATmega1284A
(c)mirro2007
www.mldb.cz