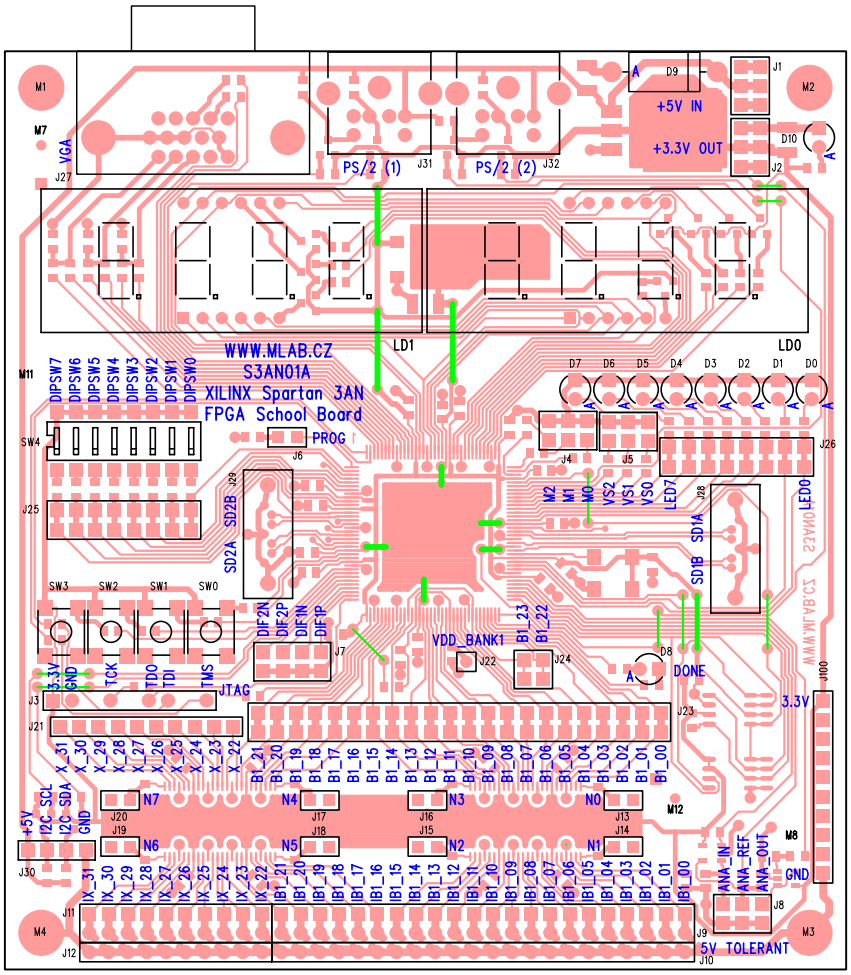
WWW.MLAB.CZ
S3AN01A
XILINX Spartan 3AN
FPGA School Board
PS/2 (1)
PS/2 (2)
+5V IN
+3.3V OUT
LD1
LD0
PROG
DONE
VDD_BANK1
JTAG
5V TOLERANT
3.3V
GND