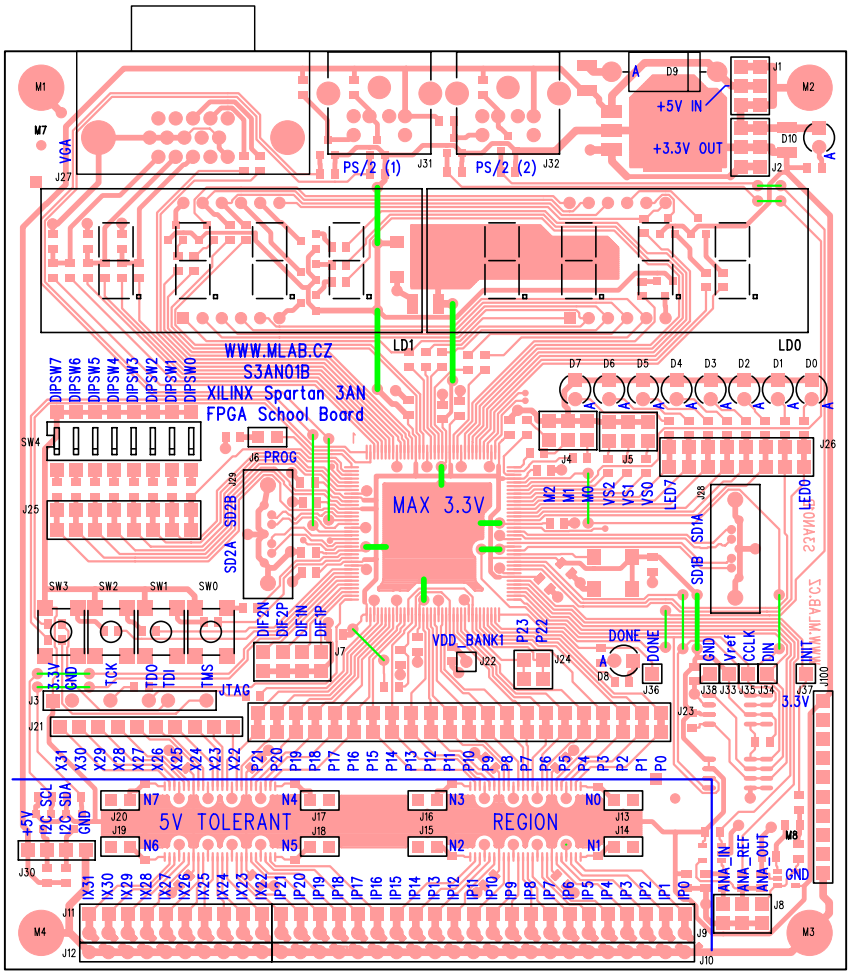
WWW.MLAB.CZ
S3AN01B
XILINX Spartan 3AN
FPGA School Board
MAX 3.3V
5V TOLERANT
REGION
PS/2 (1)
PS/2 (2)
+5V IN
+3.3V OUT
LD1
LD0
PROG
JTAG
VDD_BANK1
DONE
VGA
M1
M2
M3
M4
M7
M8