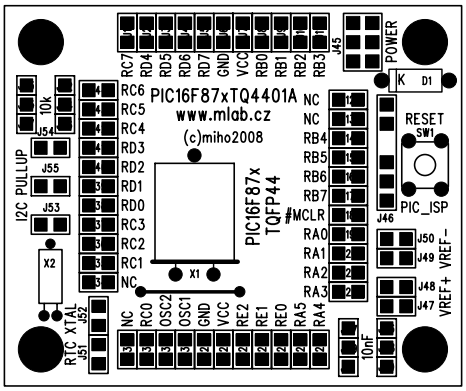
PIC16F87xTQ4401A
www.mlab.cz
(c)miho2008
PIC16F87x
TQFP44
RC7 RD4 RD5 RD6 RD7 GND VCC RB0 RB1 RB2 RB3
RC6 RC5 RC4 RD3 RD2 RD1 RD0 RC3 RC2 RC1 NC
NC NC RB4 RB5 RB6 RB7 #MCLR RA0 RA1 RA2 RA3
NC RC0 OSC2 OSC1 GND VCC RE2 RE1 RE0 RA5 RA4
J45
POWER
K D1
RESET
SW1
PIC_ISP
J46
J50 J49
J48 J47
VREF+ VREF-
10nF
10k
J54
I2C PULLUP
J55
J53
X2
X1
RTC XTAL
J51 J52

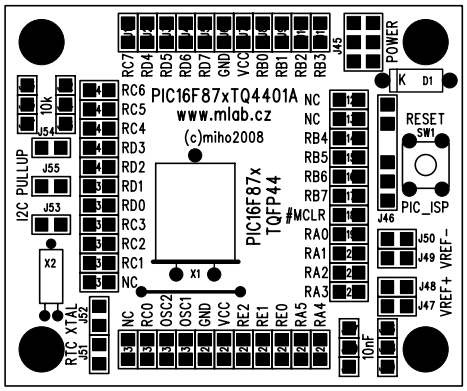
PIC16F87xTQ4401A
www.mlab.cz
(c)miho2008
PIC16F87x
TQFP44
RC7 RD4 RD5 RD6 RD7 GND VCC RB0 RB1 RB2 RB3
RC6 RC5 RC4 RD3 RD2 RD1 RD0 RC3 RC2 RC1 NC
NC NC RB4 RB5 RB6 RB7 #MCLR RA0 RA1 RA2 RA3
NC RC0 OSC2 OSC1 GND VCC RE2 RE1 RE0 RA5 RA4
J45
POWER
K D1
RESET
SW1
PIC_ISP
J46
J50 J49
J48 J47
VREF+ VREF-
10nF
10k
J54
I2C PULLUP
J55
J53
X2
X1
RTC XTAL
J51 J52

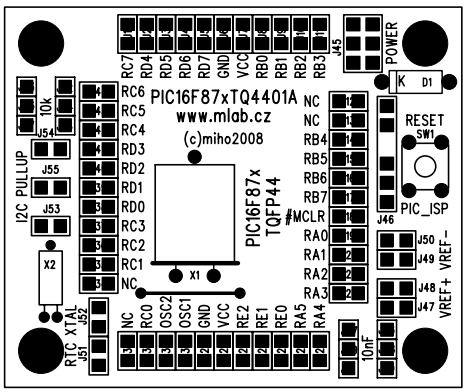
PIC16F87xTQ4401A
www.mlab.cz
(c)miho2008
PIC16F87x
TQFP44
RC7 RD4 RD5 RD6 RD7 GND VCC RB0 RB1 RB2 RB3
RC6 RC5 RC4 RD3 RD2 RD1 RD0 RC3 RC2 RC1 NC
NC NC RB4 RB5 RB6 RB7 #MCLR RA0 RA1 RA2 RA3
NC RC0 OSC2 OSC1 GND VCC RE2 RE1 RE0 RA5 RA4
J45
POWER
K D1
RESET
SW1
PIC_ISP
J46
J50 J49
J48 J47
VREF+ VREF-
10nF
10k
J54
I2C PULLUP
J55
J53
X2
X1
RTC XTAL
J51 J52

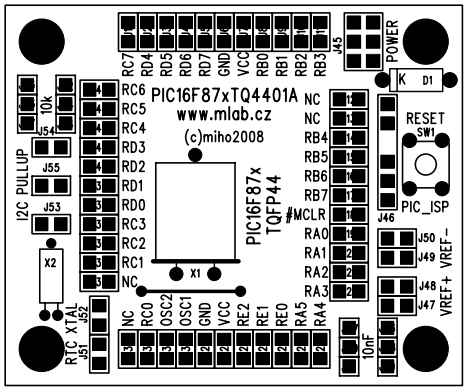
PIC16F87xTQ4401A
www.mlab.cz
(c)miho2008
PIC16F87x
TQFP44
RC7 RD4 RD5 RD6 RD7 GND VCC RB0 RB1 RB2 RB3
RC6 RC5 RC4 RD3 RD2 RD1 RD0 RC3 RC2 RC1 NC
NC NC RB4 RB5 RB6 RB7 #MCLR RA0 RA1 RA2 RA3
NC RC0 OSC2 OSC1 GND VCC RE2 RE1 RE0 RA5 RA4
J45
POWER
K D1
RESET
SW1
PIC_ISP
J46
J50 J49
J48 J47
VREF+ VREF-
10nF
10k
J54
I2C PULLUP
J55
J53
X2
X1
RTC XTAL
J51 J52

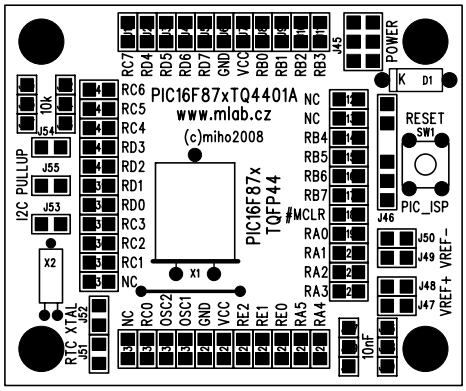
PIC16F87xTQ4401A
www.mlab.cz
(c)miho2008
PIC16F87x
TQFP44
RC7 RD4 RD5 RD6 RD7 GND VCC RB0 RB1 RB2 RB3
RC6 RC5 RC4 RD3 RD2 RD1 RD0 RC3 RC2 RC1 NC
NC NC RB4 RB5 RB6 RB7 #MCLR RA0 RA1 RA2 RA3
NC RC0 OSC2 OSC1 GND VCC RE2 RE1 RE0 RA5 RA4
J45
POWER
K D1
RESET
SW1
PIC_ISP
J46
J50 J49
J48 J47
VREF+ VREF-
10nF
10k
J54
I2C PULLUP
J55
J53
X2
X1
RTC XTAL
J51 J52

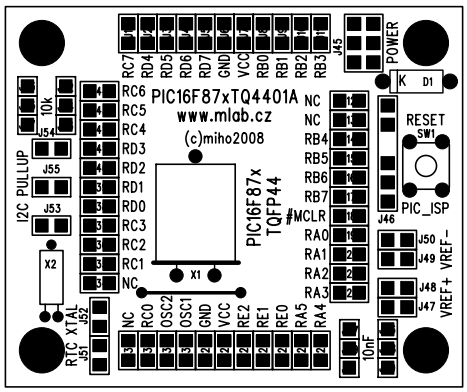
PIC16F87xTQ4401A
www.mlab.cz
(c)miho2008
PIC16F87x
TQFP44
RC7 RD4 RD5 RD6 RD7 GND VCC RB0 RB1 RB2 RB3
RC6 RC5 RC4 RD3 RD2 RD1 RD0 RC3 RC2 RC1 NC
NC NC RB4 RB5 RB6 RB7 #MCLR RA0 RA1 RA2 RA3
NC RC0 OSC2 OSC1 GND VCC RE2 RE1 RE0 RA5 RA4
J45
POWER
K D1
RESET
SW1
PIC_ISP
J46
J50 J49
J48 J47
VREF+ VREF-
10nF
10k
J54
I2C PULLUP
J55
J53
X2
X1
RTC XTAL
J51 J52