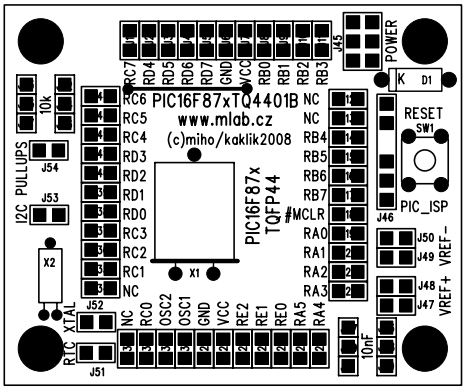
PIC16F87xTQ4401B
www.mlab.cz
(c)miho/kaklik2008
PIC16F87x
TQFP44
RESET
SW1
PIC_ISP
POWER
I2C PULLUPS
R1C XTAL
VREF+ VREF-
#MCLR
10k
10nF

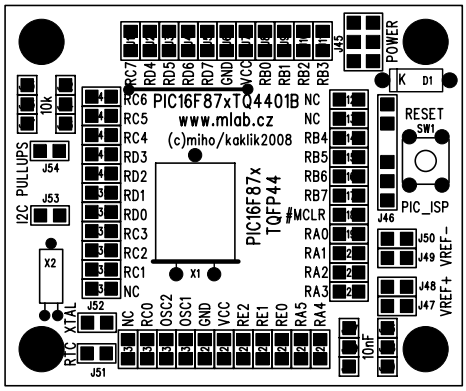
PIC16F87xTQ4401B
www.mlab.cz
(c)miho/kaklik2008
PIC16F87x
TQFP44
RESET
SW1
PIC_ISP
POWER
I2C PULLUPS
R1C XTAL
VREF+ VREF-
#MCLR
10k
10nF

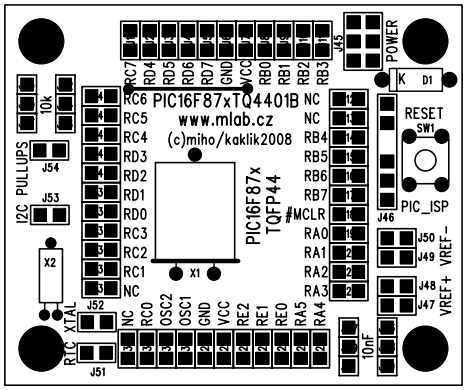
PIC16F87xTQ4401B
www.mlab.cz
(c)miho/kaklik2008
PIC16F87x
TQFP44
RESET
SW1
PIC_ISP
POWER
I2C PULLUPS
R1C XTAL
VREF+ VREF-
#MCLR
10k
10nF

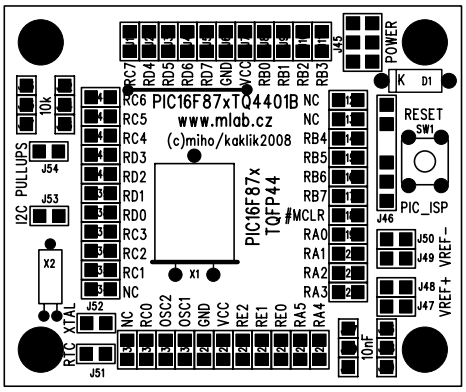
PIC16F87xTQ4401B
www.mlab.cz
(c)miho/kaklik2008
PIC16F87x
TQFP44
RESET
SW1
PIC_ISP
POWER
I2C PULLUPS
R1C XTAL
VREF+ VREF-
#MCLR
10k
10nF

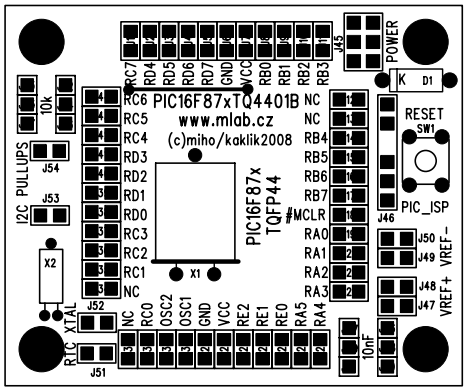
PIC16F87xTQ4401B
www.mlab.cz
(c)miho/kaklik2008
PIC16F87x
TQFP44
RESET
SW1
PIC_ISP
POWER
I2C PULLUPS
R1C XTAL
VREF+ VREF-
#MCLR
10k
10nF

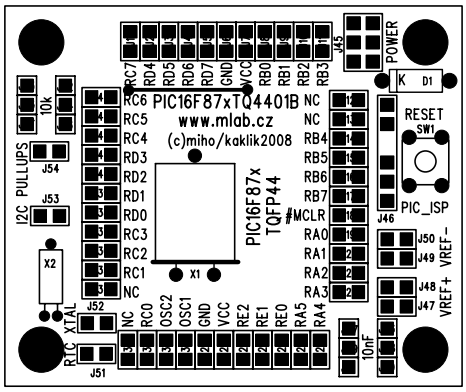
PIC16F87xTQ4401B
www.mlab.cz
(c)miho/kaklik2008
PIC16F87x
TQFP44
RESET
SW1
PIC_ISP
POWER
I2C PULLUPS
R1C XTAL
VREF+ VREF-
#MCLR
10k
10nF