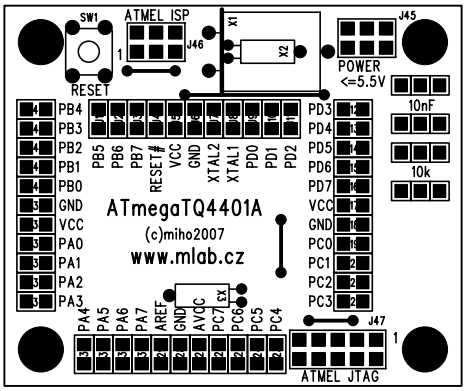
SW1
ATMEL ISP
J46
X1
X2
J45
POWER
<=5.5V
RESET
10nF
10k
PB4 PB3 PB2 PB1 PB0 GND VCC PA0 PA1 PA2 PA3
PB5 PB6 PB7 RESET# VCC GND XTAL2 XTAL1 PD0 PD1 PD2
PD3 PD4 PD5 PD6 PD7 VCC GND PC0 PC1 PC2 PC3
ATmegaTQ4401A
(c)miho2007
www.mlab.cz
PA4 PA5 PA6 PA7 AREF GND AVCC PC7 PC6 PC5 PC4
EX
J47
ATMEL JTAG

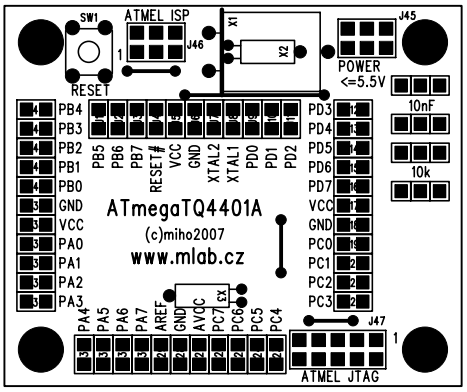
SW1
ATMEL ISP
J46
X1
X2
J45
POWER
<=5.5V
RESET
10nF
10k
PB4 PB3 PB2 PB1 PB0 GND VCC PA0 PA1 PA2 PA3
PB5 PB6 PB7 RESET# VCC GND XTAL2 XTAL1 PD0 PD1 PD2
PD3 PD4 PD5 PD6 PD7 VCC GND PC0 PC1 PC2 PC3
ATmegaTQ4401A
(c)miho2007
www.mlab.cz
PA4 PA5 PA6 PA7 AREF GND AVCC PC7 PC6 PC5 PC4
EX
J47
ATMEL JTAG

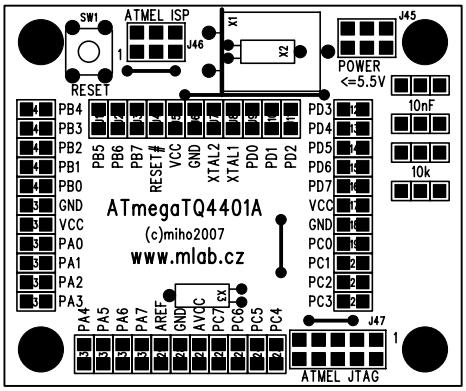
SW1
ATMEL ISP
J46
X1
X2
J45
POWER
<=5.5V
RESET
10nF
10k
PB4 PB3 PB2 PB1 PB0 GND VCC PA0 PA1 PA2 PA3
PB5 PB6 PB7 RESET# VCC GND XTAL2 XTAL1 PD0 PD1 PD2
PD3 PD4 PD5 PD6 PD7 VCC GND PC0 PC1 PC2 PC3
ATmegaTQ4401A
(c)miho2007
www.mlab.cz
PA4 PA5 PA6 PA7 AREF GND AVCC PC7 PC6 PC5 PC4
EX
J47
ATMEL JTAG

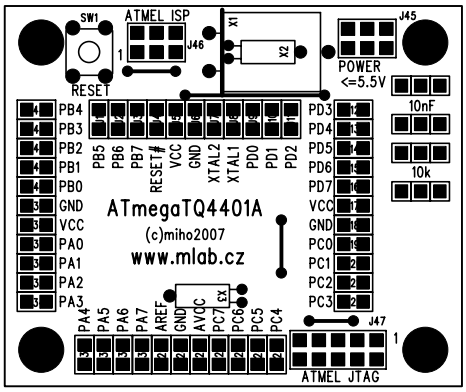
SW1
ATMEL ISP
J46
X1
X2
J45
POWER
<=5.5V
RESET
10nF
10k
PB4 PB3 PB2 PB1 PB0 GND VCC PA0 PA1 PA2 PA3
PB5 PB6 PB7 RESET# VCC GND XTAL2 XTAL1 PD0 PD1 PD2
PD3 PD4 PD5 PD6 PD7 VCC GND PC0 PC1 PC2 PC3
ATmegaTQ4401A
(c)miho2007
www.mlab.cz
PA4 PA5 PA6 PA7 AREF GND AVCC PC7 PC6 PC5 PC4
EX
J47
ATMEL JTAG

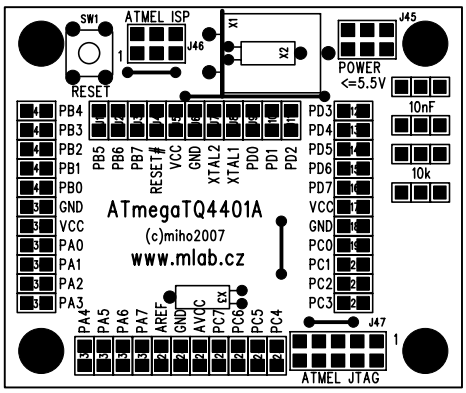
SW1
ATMEL ISP
J46
X1
X2
J45
POWER
<=5.5V
RESET
10nF
10k
PB4 PB3 PB2 PB1 PB0 GND VCC PA0 PA1 PA2 PA3
PB5 PB6 PB7 RESET# VCC GND XTAL2 XTAL1 PD0 PD1 PD2
PD3 PD4 PD5 PD6 PD7 VCC GND PC0 PC1 PC2 PC3
ATmegaTQ4401A
(c)miho2007
www.mlab.cz
PA4 PA5 PA6 PA7 AREF GND AVCC PC7 PC6 PC5 PC4
EX
J47
ATMEL JTAG

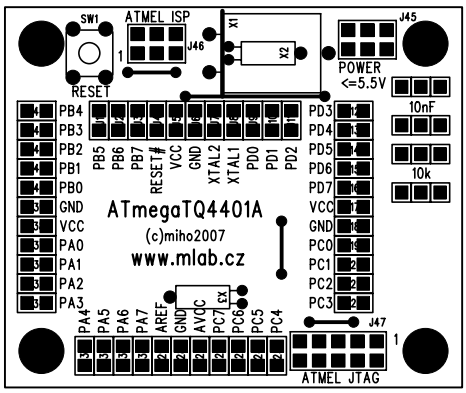
SW1
ATMEL ISP
J46
X1
X2
J45
POWER
<=5.5V
RESET
10nF
10k
PB4 PB3 PB2 PB1 PB0 GND VCC PA0 PA1 PA2 PA3
PB5 PB6 PB7 RESET# VCC GND XTAL2 XTAL1 PD0 PD1 PD2
PD3 PD4 PD5 PD6 PD7 VCC GND PC0 PC1 PC2 PC3
ATmegaTQ4401A
(c)miho2007
www.mlab.cz
PA4 PA5 PA6 PA7 AREF GND AVCC PC7 PC6 PC5 PC4
EX
J47
ATMEL JTAG