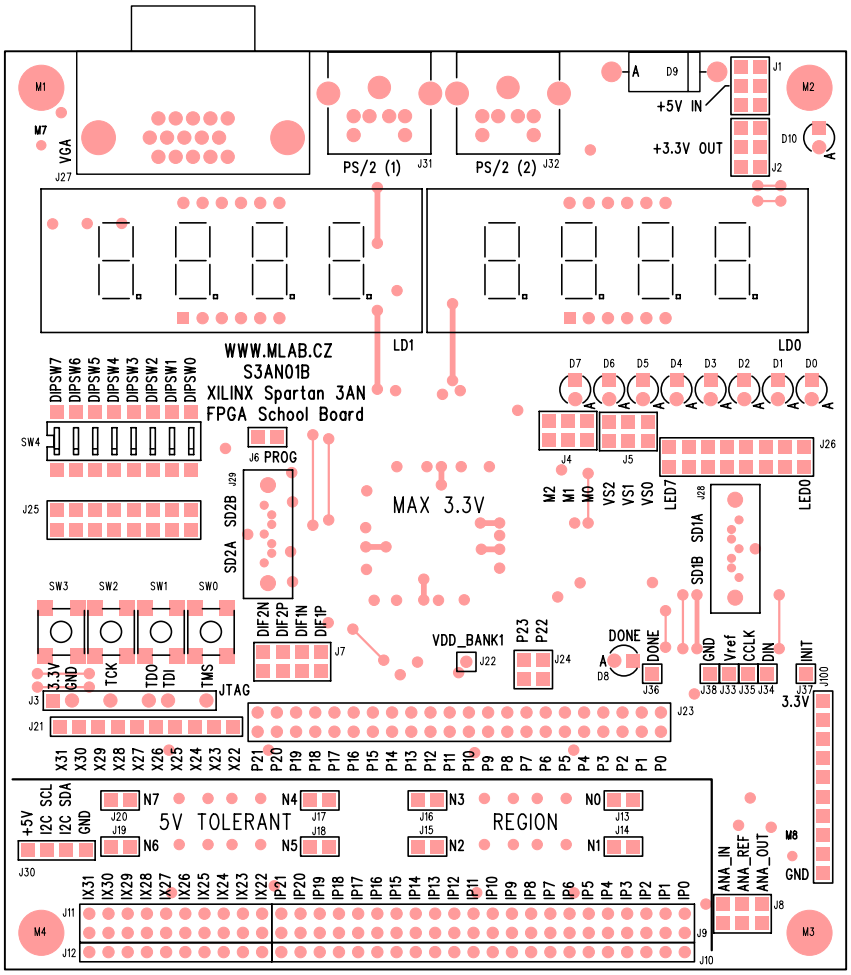
WWW.MLAB.CZ
S3AN01B
XILINX Spartan 3AN
FPGA School Board
MAX 3.3V
5V TOLERANT
REGION
PS/2 (1)
PS/2 (2)
+5V IN
+3.3V OUT
VGA
PROG
JTAG
VDD_BANK1
DONE
LD1
LD0
LED7
LED0
SD1A
SD1B
SD2A
SD2B
DIPSW7
DIPSW6
DIPSW5
DIPSW4
DIPSW3
DIPSW2
DIPSW1
DIPSW0
SW3
SW2
SW1
SW0
3.3V
GND
TCK
TDO
TDI
TMS
DIF2N
DIF2P
DIF1N
DIF1P
P23
P22
M2
M1
M0
VS2
VS1
VS0
Vref
CCLK
DIN
INIT
+5V
I2C SCL
I2C SDA
ANA_IN
ANA_REF
ANA_OUT
M1
M2
M3
M4
M7
M8