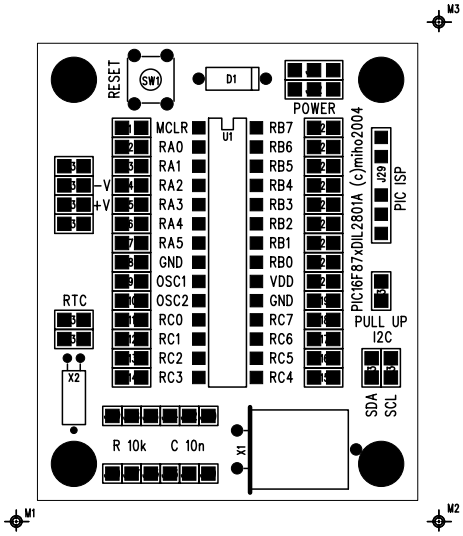
M3
RESET
SW1
D1
POWER
U1
MCLR
RA0
RA1
RA2
RA3
RA4
RA5
GND
OSC1
OSC2
RC0
RC1
RC2
RC3
RB7
RB6
RB5
RB4
RB3
RB2
RB1
RB0
VDD
GND
RC7
RC6
RC5
RC4
-V
+V
RTC
X2
PIC16F87xDIL2801A (c)miho2004
J29
PIC ISP
J3
PULL UP
I2C
SDA
SCL
R 10k
C 10n
X1
M1
M2