Generated by Foxit PDF Creator © Foxit Software
http://www.foxitsoftware.com For evaluation only.

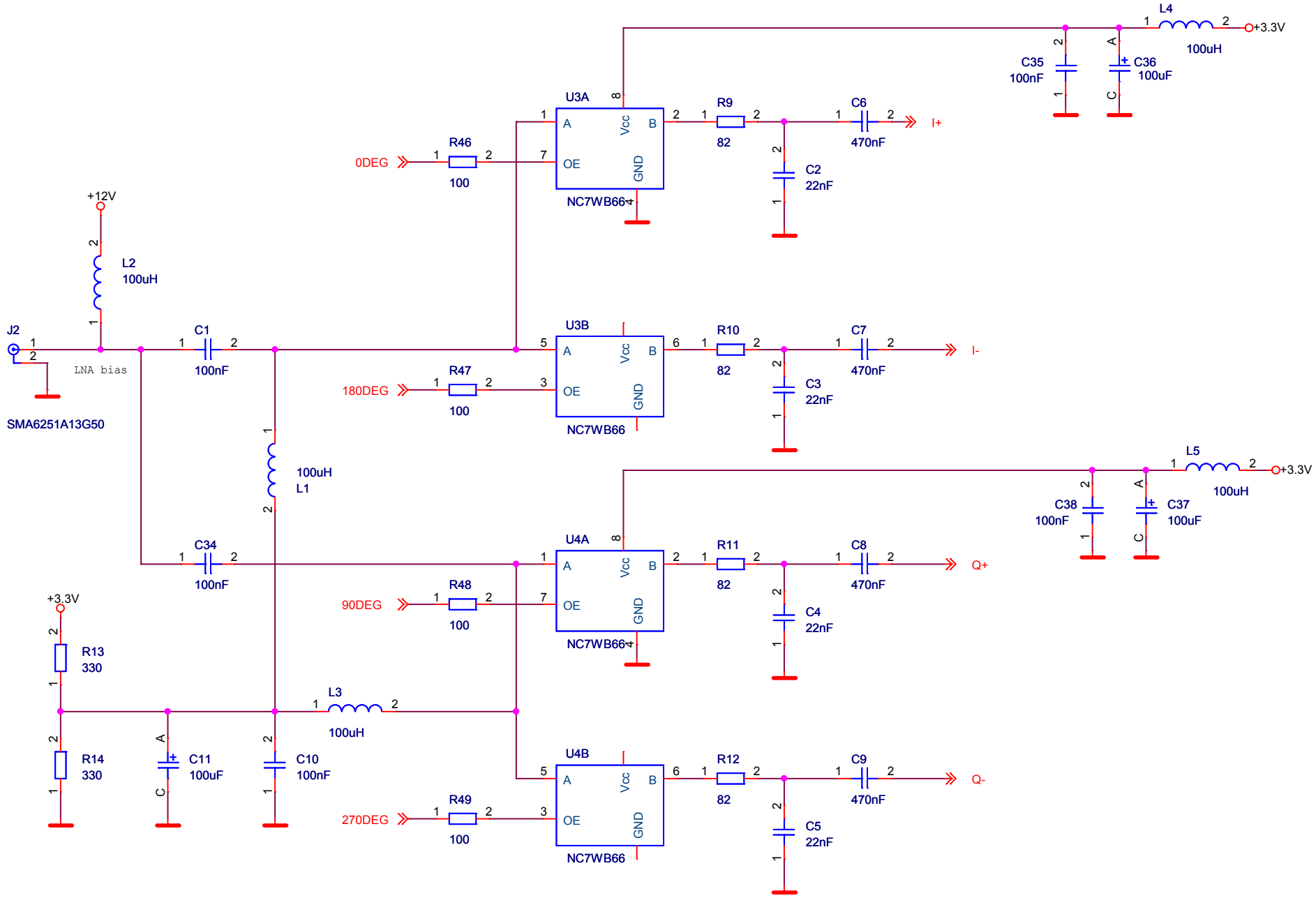

Firma		Author
MLAB		KAKLIK
Size A4	Project Name Software Defined Radio	Schematic Name SDRX	Rev A
Date: Monday, August 16, 2010	Sheet 2 of 4	