Edited by Foxit PDF Editor
Copyright (c) by Foxit Software Company, 2004 - 2007
For Evaluation Only.

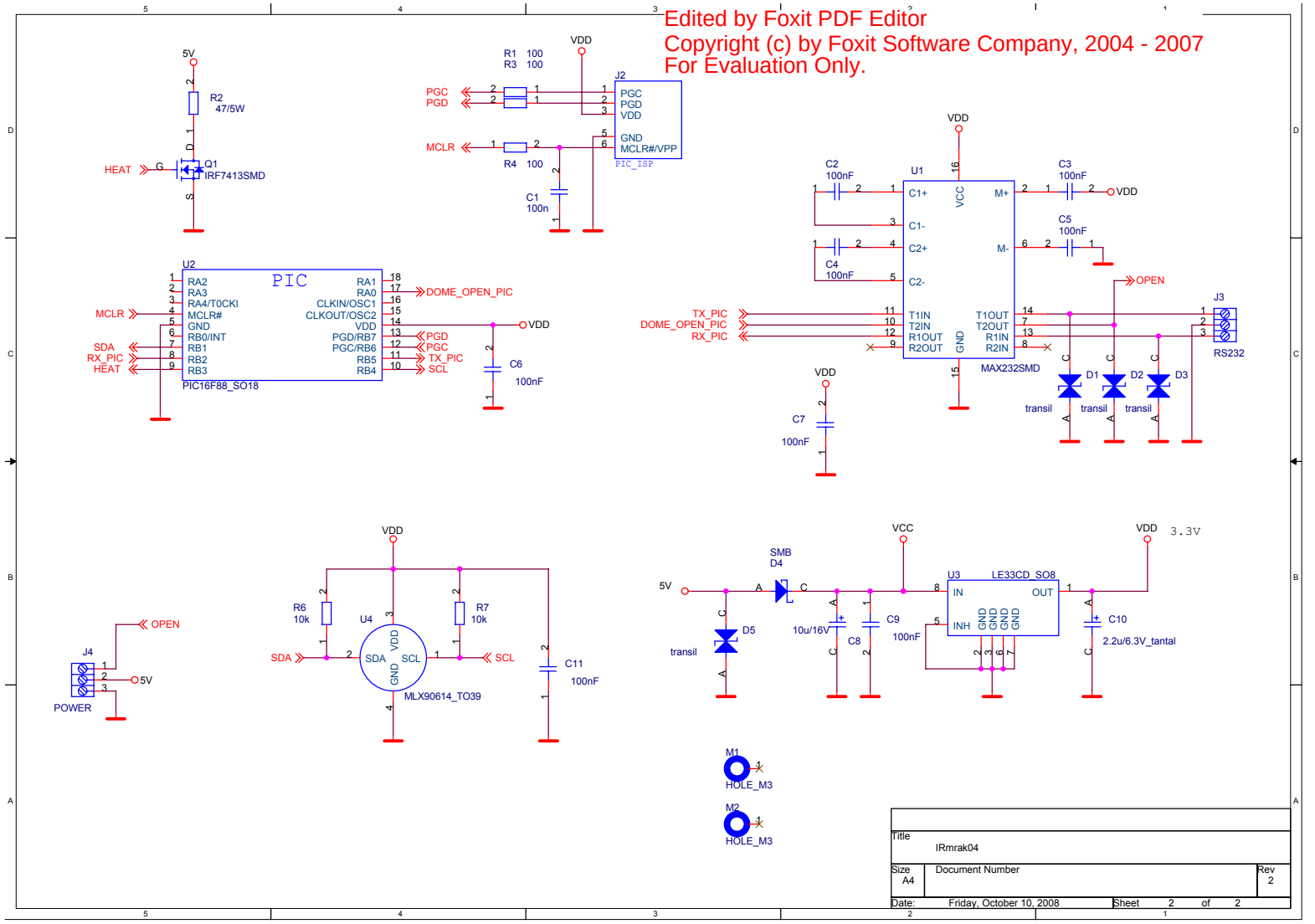

Title	IRmrak04
Size A4	Document Number
Rev	2
Date: Friday, October 10, 2008	Sheet 2 of 2

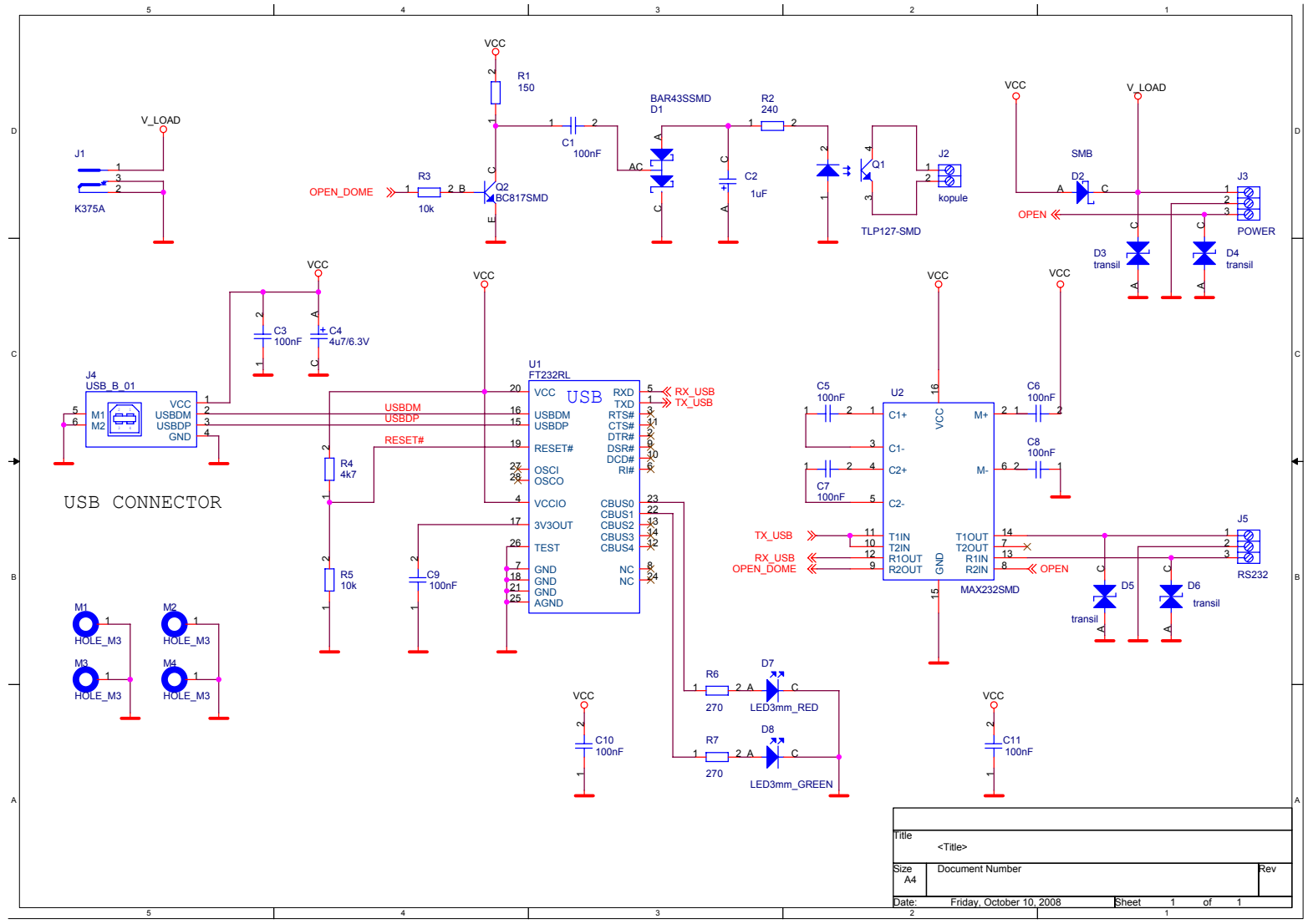

Title	<Title>
Size A4	Document Number
Rev	
Date: Friday, October 10, 2008	Sheet 1 of 1