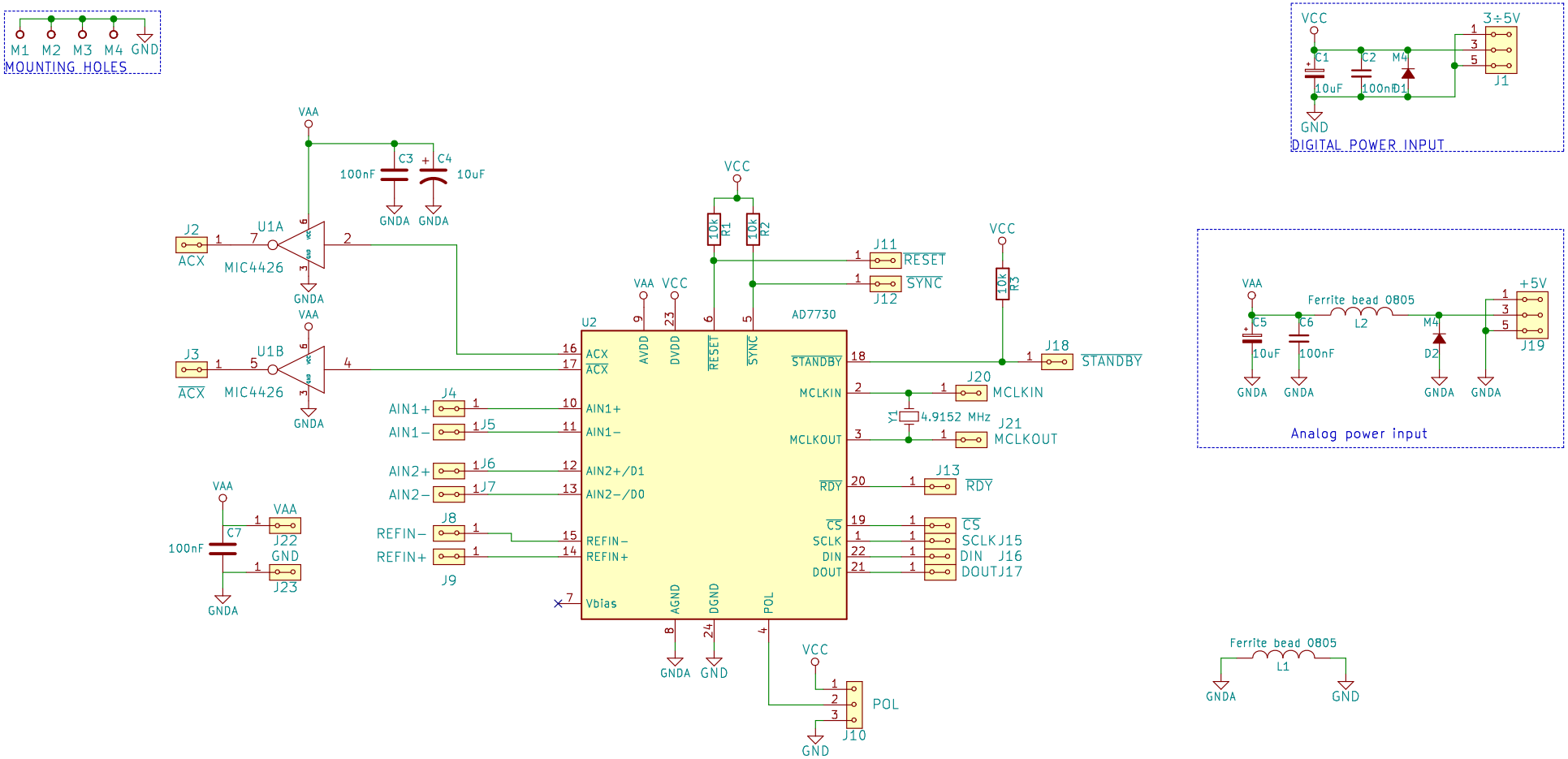

BSD
nickname <email@example.com>
Short description
Two lines are maximum
VERSION
Mlab www.mlab.cz

Sheet: /
File: BRIDGEADC01A.sch

Title: NAME

Size: A4	Date: %F	**Rev: REV**
KiCad E.D.A. kicad 0.201512211246+639139ubuntu15.10.1-stable		Id: 1/1