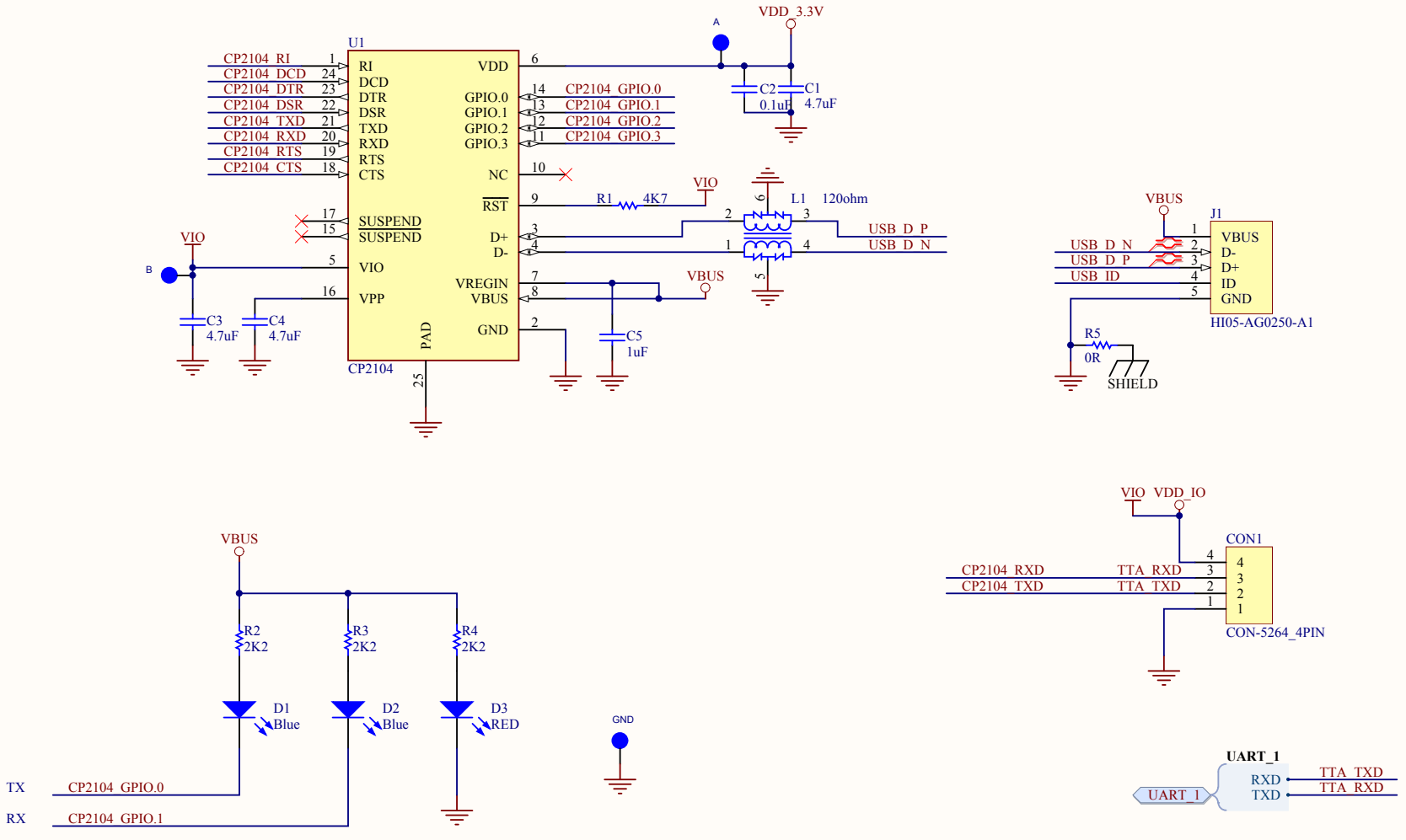

1. GPIO_0 and GPIO_1 Set to Open-Drain / Automatic by Device

2. When you config the cp2104, A-B make short.

Title	*UART for ODROID-X*		*R&D PART* *704 Anyang K-center 1591-9* *Burim Dongan Gu* *Gyeonggido* *South Korea*
Size: A4	Number: 1	Revision: 0.1	
Date: 2012-07-31 Time: 오후 3:46:00		Sheet 1 of 1	
File: C:\project\hw\hkl\PC\4PC-BASE\UART_BD\UART_BD.SchDoc			