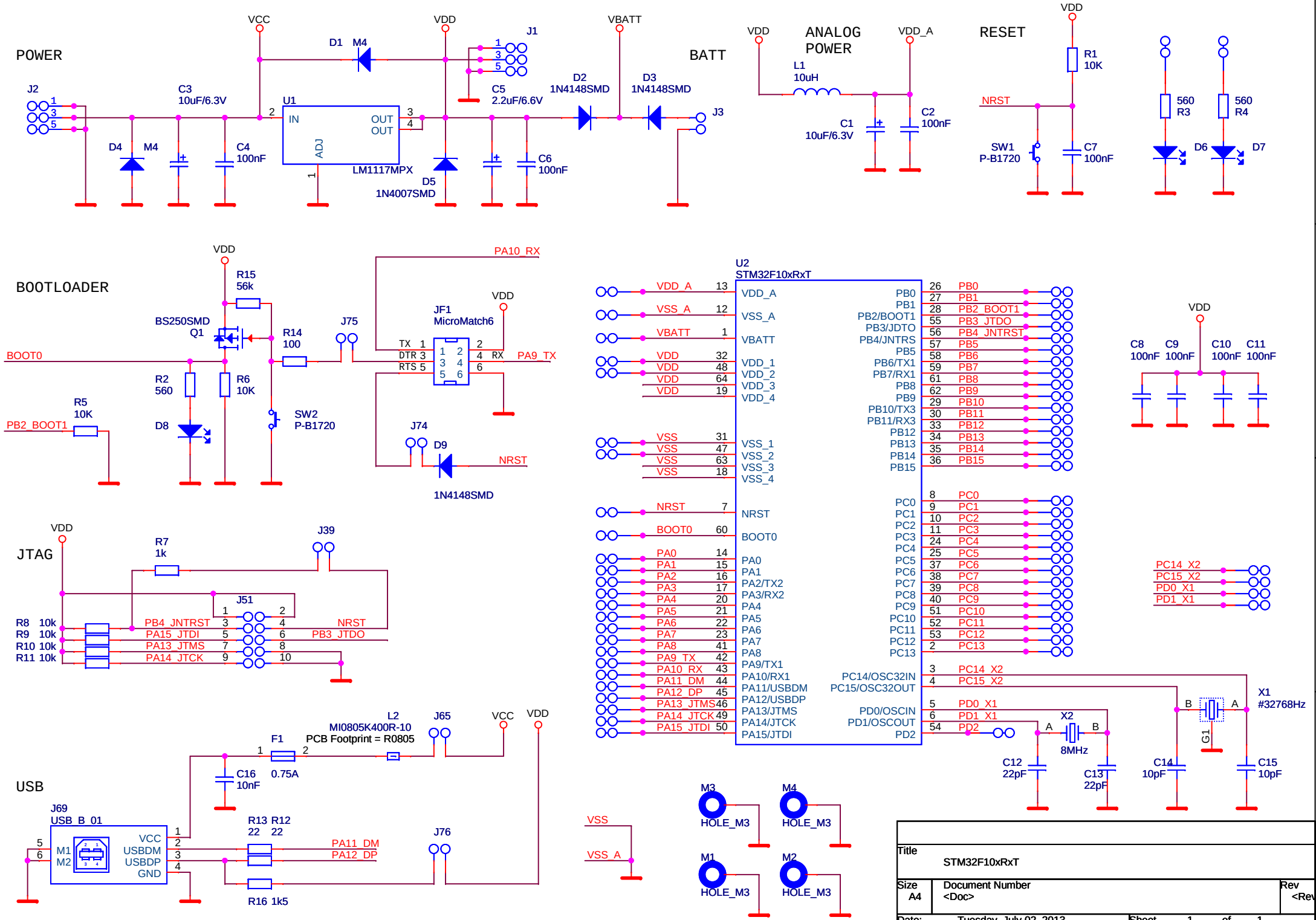
POWER
VCC
VDD
VBATT
D1 M4
J1
J2
C3 10uF/6.3V
U1
IN
OUT
OUT
ADJ
LM1117MPX
C5 2.2uF/6.6V
D2 1N4148SMD
D3 1N4148SMD
J3
D4 M4
C4 100nF
D5 1N4007SMD
C6 100nF
BATT
ANALOG POWER
VDD_A
L1 10uH
C1 10uF/6.3V
C2 100nF
RESET
R1 10K
NRST
SW1 P-B1720
C7 100nF
560 R3
560 R4
D6
D7
BOOTLOADER
R15 56k
BS250SMD Q1
R14 100
J75
PA10_RX
JF1 MicroMatch6
TX
DTR
RTS
RX
PA9_TX
BOOT0
R2 560
R6 10K
R5 10K
PB2_BOOT1
D8
SW2 P-B1720
J74
D9
1N4148SMD
U2
STM32F10xRxT
VDD_A
VSS_A
VBATT
VDD_1
VDD_2
VDD_3
VDD_4
VSS_1
VSS_2
VSS_3
VSS_4
NRST
BOOT0
PA0
PA1
PA2/TX2
PA3/RX2
PA4
PA5
PA6
PA7
PA8
PA9/TX1
PA10/RX1
PA11/USBDM
PA12/USBDP
PA13/JTMS
PA14/JTCK
PA15/JTDI
PB0
PB1
PB2/BOOT1
PB3/JDTO
PB4/JNTRS
PB5
PB6/TX1
PB7/RX1
PB8
PB9
PB10/TX3
PB11/RX3
PB12
PB13
PB14
PB15
PC0
PC1
PC2
PC3
PC4
PC5
PC6
PC7
PC8
PC9
PC10
PC11
PC12
PC13
PC14/OSC32IN
PC15/OSC32OUT
PD0/OSCIN
PD1/OSCOUT
PD2
PB2_BOOT1
PB3_JTDO
PB4_JNTRST
C8 100nF
C9 100nF
C10 100nF
C11 100nF
PC14_X2
PC15_X2
PD0_X1
PD1_X1
JTAG
R7 1k
J39
J51
R8 10k
R9 10k
R10 10k
R11 10k
PB4_JNTRST
PA15_JTDI
PA13_JTMS
PA14_JTCK
NRST
PB3_JTDO
X2 8MHz
X1 #32768Hz
C12 22pF
C13 22pF
C14 10pF
C15 10pF
G1
USB
L2 MI0805K400R-10
PCB Footprint = R0805
J65
F1 0.75A
C16 10nF
J69 USB_B_01
VCC
USBDM
USBDP
GND
M1
M2
R13 22
R12 22
R16 1k5
PA11_DM
PA12_DP
J76
VSS
VSS_A
M3 HOLE_M3
M4 HOLE_M3
M1 HOLE_M3
M2 HOLE_M3
Title
STM32F10xRxT
Size A4
Document Number
<Doc>
Rev
<RevC
Date: Tuesday, July 02, 2013
Sheet 1 of 1