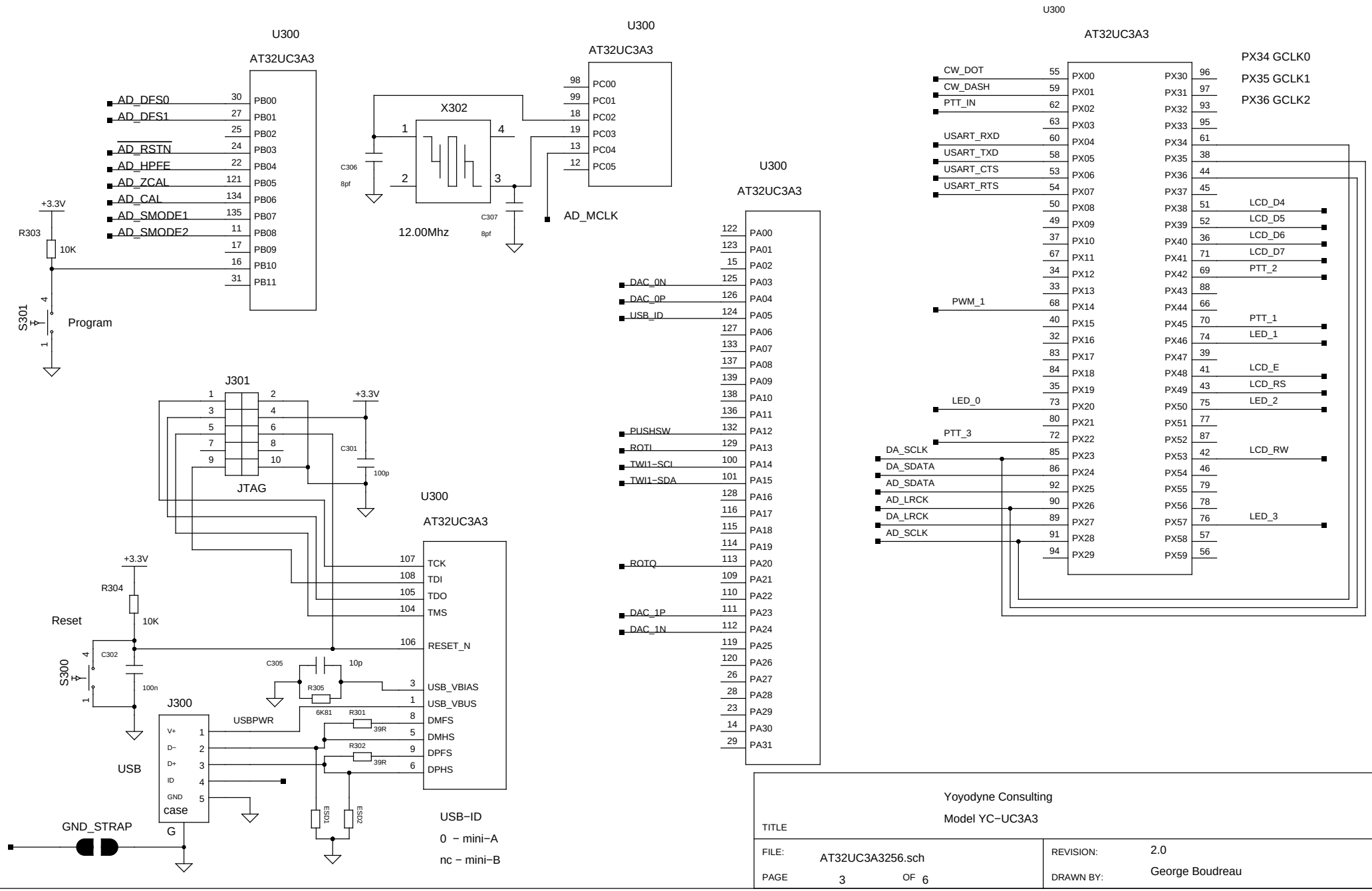
U300
AT32UC3A3
AD_DFS0 30 PB00
AD_DFS1 27 PB01
25 PB02
AD_RSTN 24 PB03
AD_HPFE 22 PB04
AD_ZCAL 121 PB05
AD_CAL 134 PB06
AD_SMODE1 135 PB07
AD_SMODE2 11 PB08
17 PB09
16 PB10
31 PB11
+3.3V
R303
10K
S301
Program
X302
12.00Mhz
C306
8pf
C307
8pf
98 PC00
99 PC01
18 PC02
19 PC03
13 PC04
12 PC05
AD_MCLK
122 PA00
123 PA01
15 PA02
DAC_0N 125 PA03
DAC_0P 126 PA04
USB_ID 124 PA05
127 PA06
133 PA07
137 PA08
139 PA09
138 PA10
136 PA11
PUSHSW 132 PA12
ROTI 129 PA13
TWI1−SCI 100 PA14
TWI1−SDA 101 PA15
128 PA16
116 PA17
115 PA18
114 PA19
ROTQ 113 PA20
109 PA21
110 PA22
DAC_1P 111 PA23
DAC_1N 112 PA24
119 PA25
120 PA26
26 PA27
28 PA28
23 PA29
14 PA30
29 PA31
PX34 GCLK0
PX35 GCLK1
PX36 GCLK2
CW_DOT 55 PX00
CW_DASH 59 PX01
PTT_IN 62 PX02
63 PX03
USART_RXD 60 PX04
USART_TXD 58 PX05
USART_CTS 53 PX06
USART_RTS 54 PX07
50 PX08
49 PX09
37 PX10
67 PX11
34 PX12
33 PX13
PWM_1 68 PX14
40 PX15
32 PX16
83 PX17
84 PX18
35 PX19
LED_0 73 PX20
80 PX21
PTT_3 72 PX22
DA_SCLK 85 PX23
DA_SDATA 86 PX24
AD_SDATA 92 PX25
AD_LRCK 90 PX26
DA_LRCK 89 PX27
AD_SCLK 91 PX28
94 PX29
PX30 96
PX31 97
PX32 93
PX33 95
PX34 61
PX35 38
PX36 44
PX37 45
PX38 51 LCD_D4
PX39 52 LCD_D5
PX40 36 LCD_D6
PX41 71 LCD_D7
PX42 69 PTT_2
PX43 88
PX44 66
PX45 70 PTT_1
PX46 74 LED_1
PX47 39
PX48 41 LCD_E
PX49 43 LCD_RS
PX50 75 LED_2
PX51 77
PX52 87
PX53 42 LCD_RW
PX54 46
PX55 79
PX56 78
PX57 76 LED_3
PX58 57
PX59 56
J301
JTAG
C301
100p
R304
10K
Reset
S300
C302
100n
C305
10p
R305
6K81
R301
39R
R302
39R
USBPWR
J300
USB
V+
D−
D+
ID
GND
case
G
GND_STRAP
ESD1
ESD2
107 TCK
108 TDI
105 TDO
104 TMS
106 RESET_N
3 USB_VBIAS
1 USB_VBUS
8 DMFS
5 DMHS
9 DPFS
6 DPHS
USB−ID
0 − mini−A
nc − mini−B
Yoyodyne Consulting
Model YC−UC3A3
TITLE
FILE: AT32UC3A3256.sch
REVISION: 2.0
PAGE 3 OF 6
DRAWN BY: George Boudreau