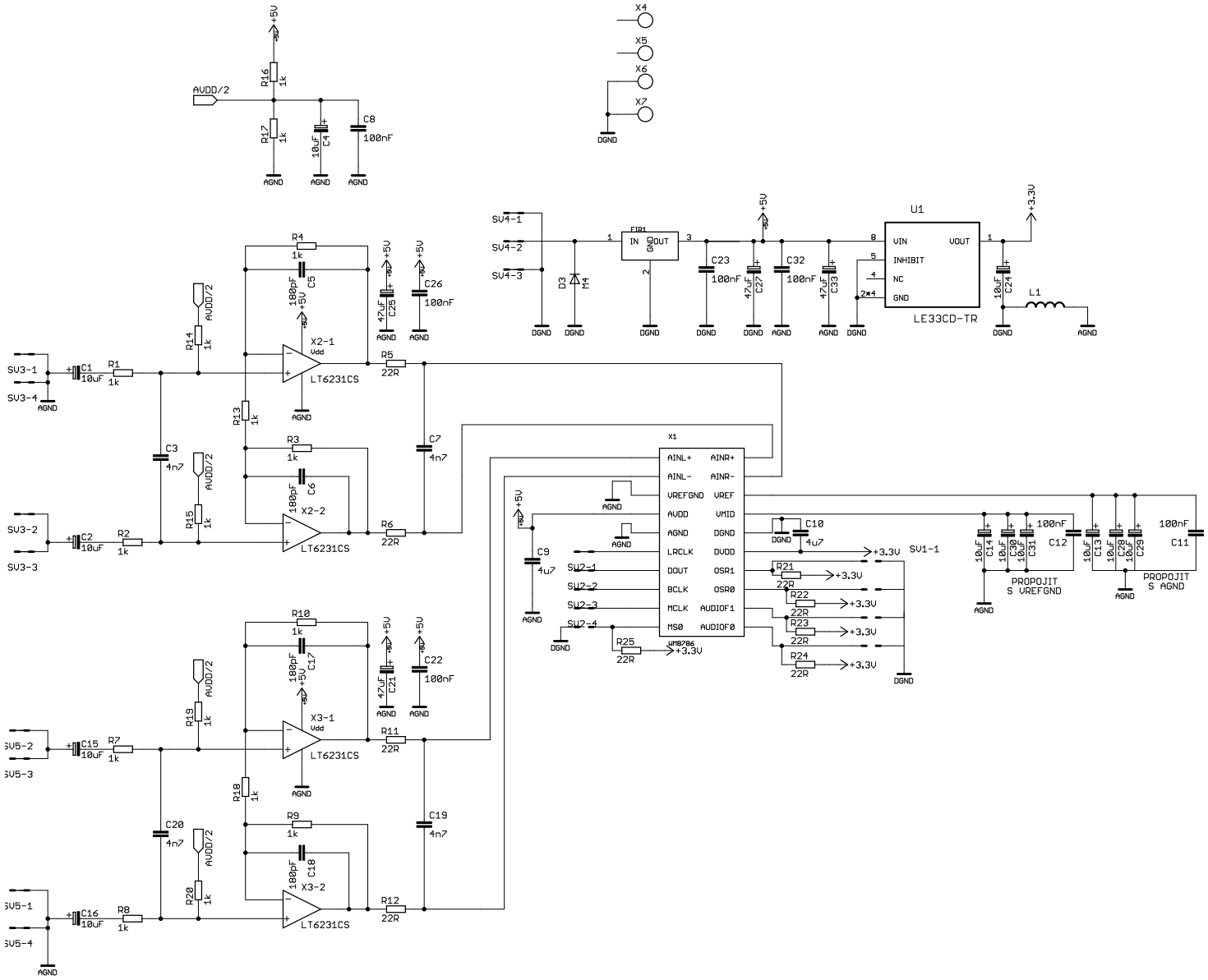
AVDD/2
R16 1k
+5V
R17 1k
10uF C4
C8 100nF
AGND
X4
X5
X6
X7
DGND
SV4-1
SV4-2
SV4-3
FIR1
IN GND OUT
D3 M4
C23 100nF
C27 47uF
C32 100nF
C33 47uF
U1
VIN
VOUT
INHIBIT
NC
GND
LE33CD-TR
+3.3V
C24 10uF
L1
R4 1k
C5 180pF
C25 47uF
C26 100nF
X2-1
Vdd
LT6231CS
R5 22R
R14 1k
SV3-1
SV3-4
C1 10uF
R1 1k
R13 1k
C7 4n7
C3 4n7
R3 1k
C6 180pF
X2-2
R6 22R
R15 1k
SV3-2
SV3-3
C2 10uF
R2 1k
X1
AINL+
AINL-
VREFGND
AVDD
AGND
LRCLK
DOUT
BCLK
MCLK
MS0
AINR+
AINR-
VREF
VMID
DGND
DVDD
OSR1
OSR0
AUDIOF1
AUDIOF0
WM8786
C9 4u7
C10 4u7
SV2-1
SV2-2
SV2-3
SV2-4
R25 22R
R21 22R
R22 22R
R23 22R
R24 22R
SV1-1
C14 10uF
C30 10uF
C31 100nF
C12
PROPOJIT S VREFGND
C13 10uF
C28 10uF
C29 100nF
C11
PROPOJIT S AGND
R10 1k
C17 180pF
C21 47uF
C22 100nF
X3-1
Vdd
LT6231CS
R11 22R
R19 1k
SV5-2
SV5-3
C15 10uF
R7 1k
R18 1k
C19 4n7
C20 4n7
R9 1k
C18 180pF
X3-2
R12 22R
R20 1k
SV5-1
SV5-4
C16 10uF
R8 1k