Generated by Foxit PDF Creator © Foxit Software
http://www.foxitsoftware.com For evaluation only.

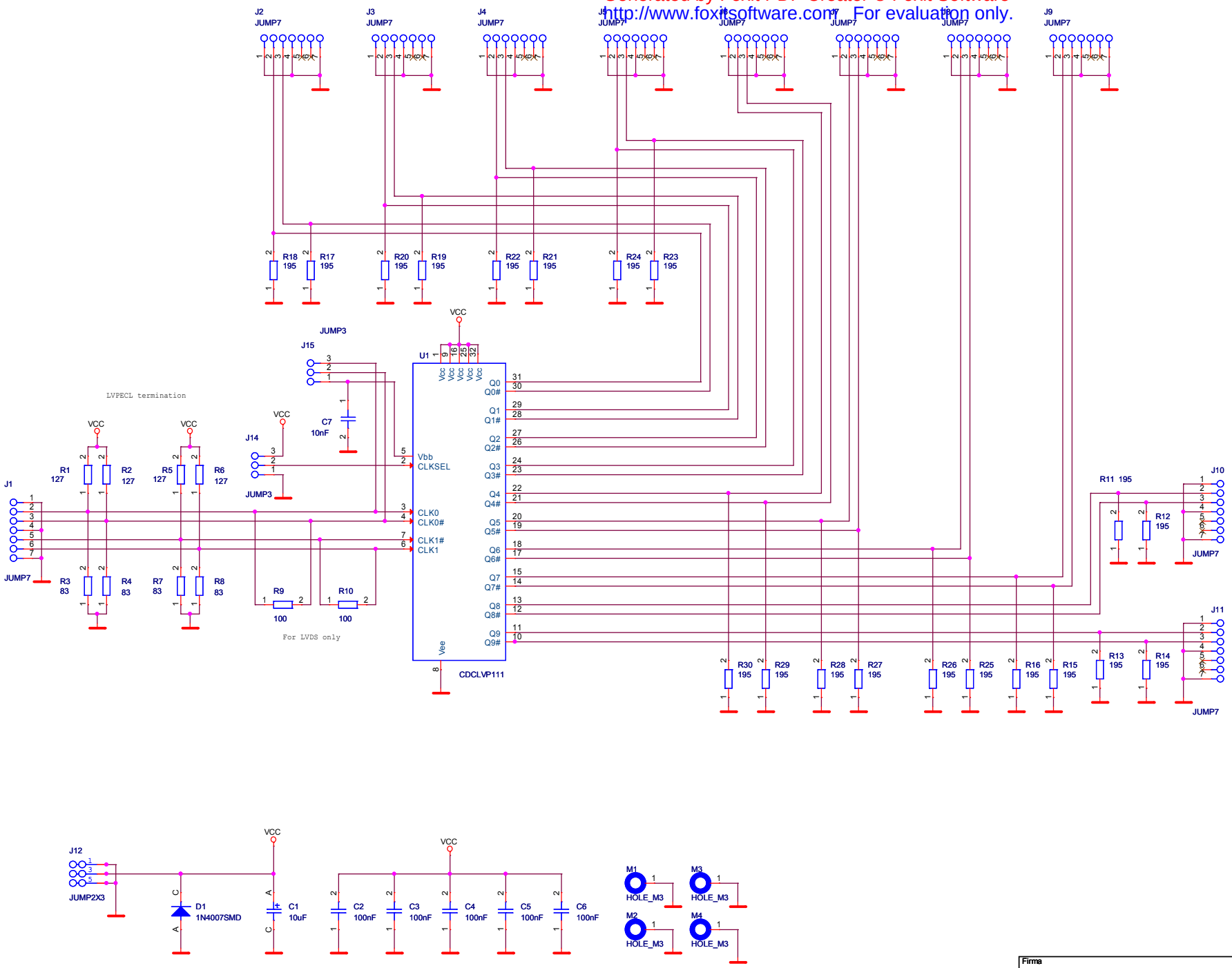

Firma			Author
MLAB			Kaklik
Size A3	Project Name Clock	Schematic Name CLKHUB02A	Rev A
Date: Thursday, July 15, 2010		Sheet 1 of 1	