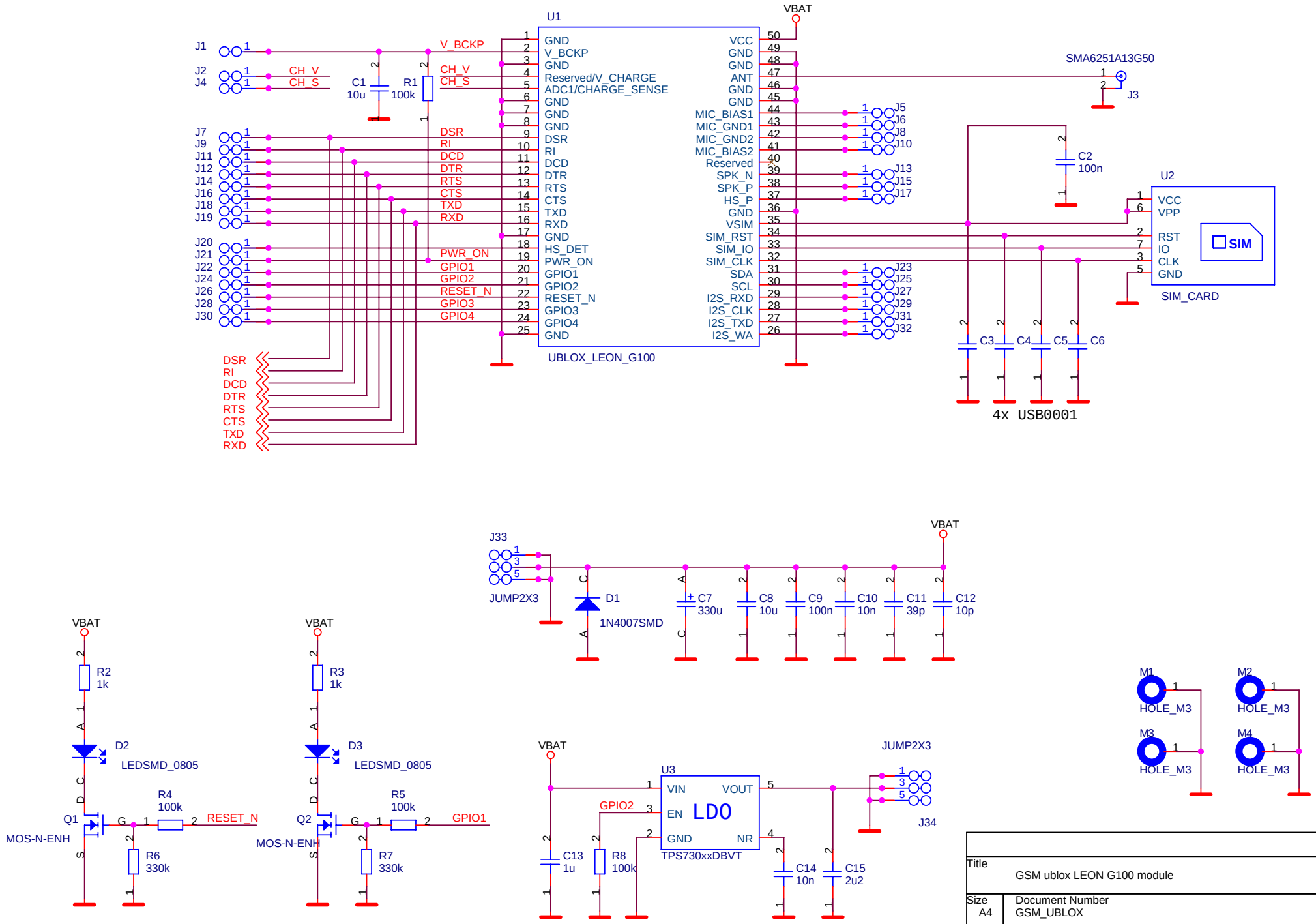

Title	GSM ublox LEON G100 module	
Size A4	Document Number GSM_UBLOX	Rev 1.0
Date: Wednesday, July 10, 2013	Sheet 1 of 2	

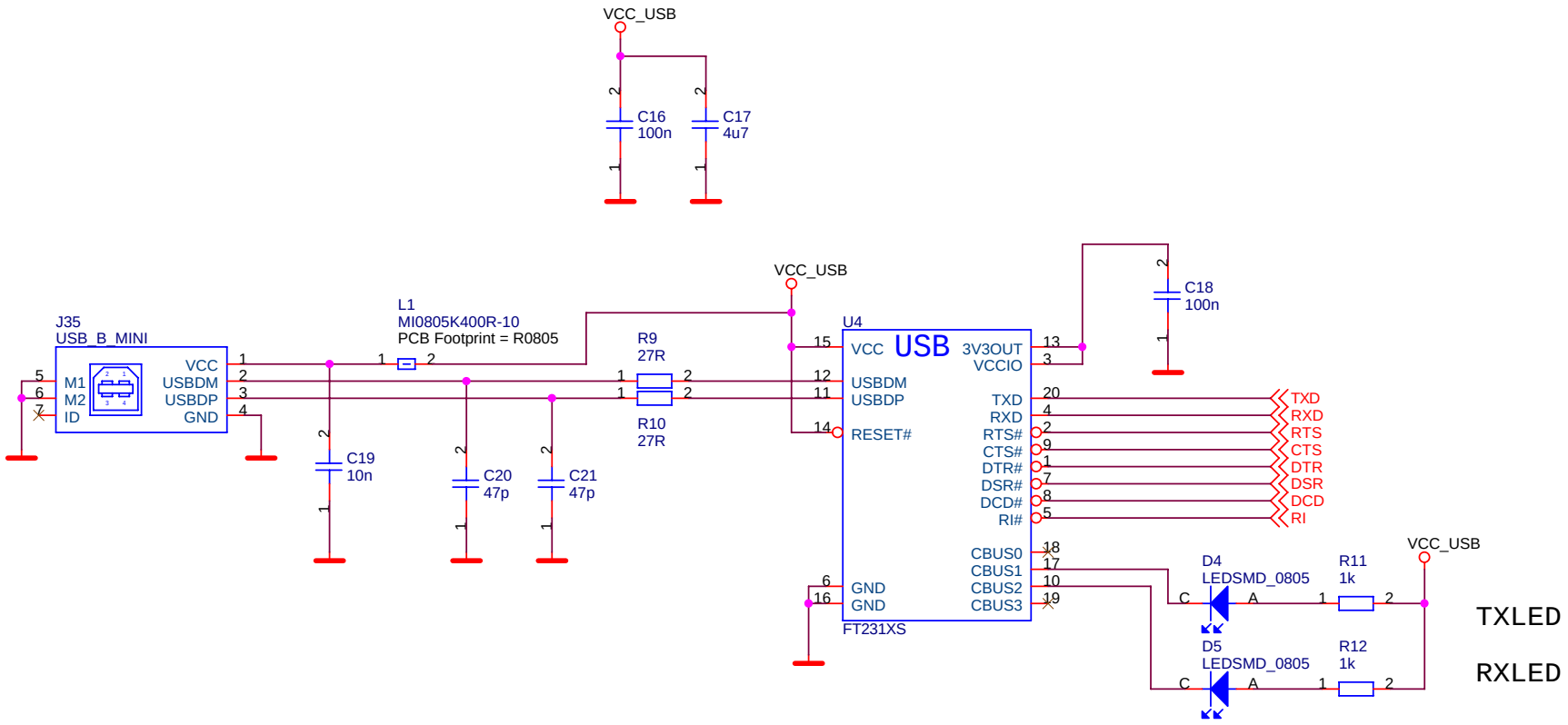

Title	GSM ublox LEON G100 module	
Size A4	Document Number GSM_UBLOX	Rev 1.0
Date: Wednesday, July 10, 2013	Sheet 2 of 2	