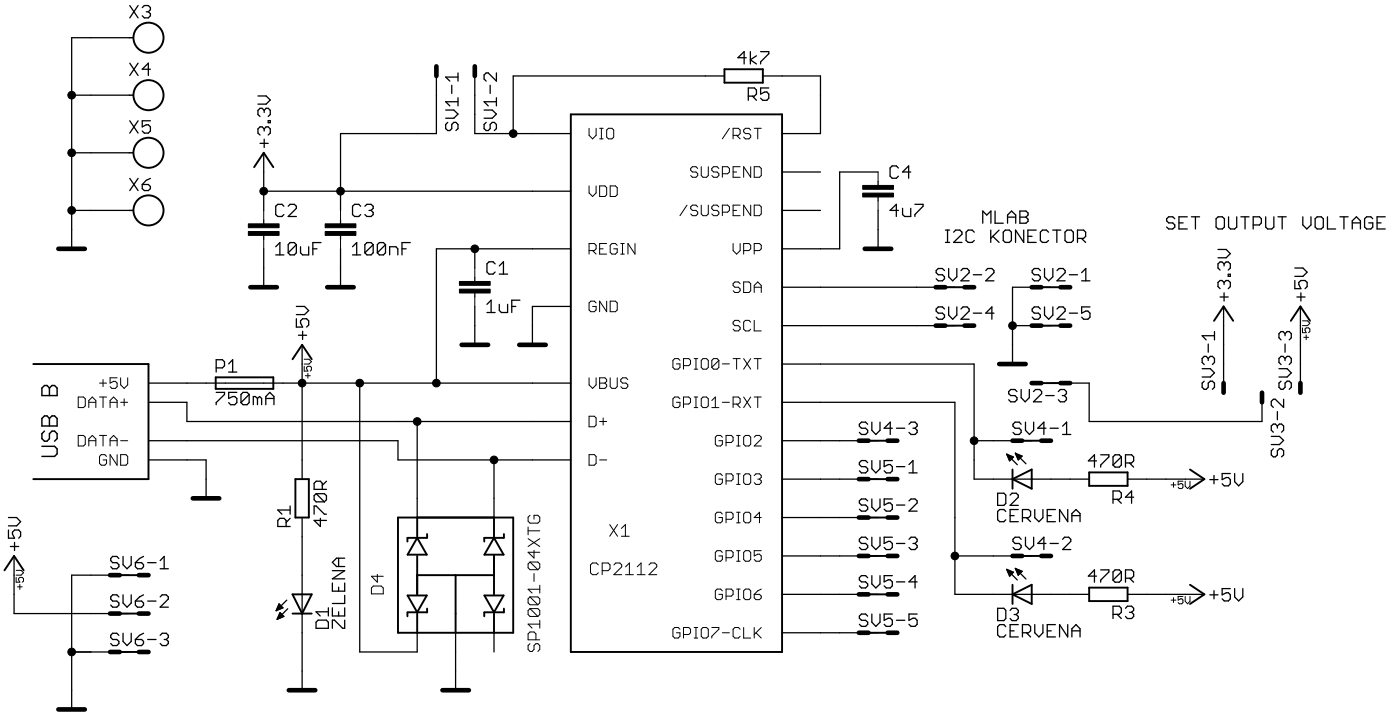
X3
X4
X5
X6
+3.3V
SV1-1
SV1-2
4k7
R5
VIO
/RST
SUSPEND
VDD
/SUSPEND
C4
4u7
C2
10uF
C3
100nF
REGIN
VPP
C1
1uF
GND
SDA
SCL
MLAB
I2C KONECTOR
SV2-2
SV2-1
SV2-4
SV2-5
SET OUTPUT VOLTAGE
SV3-1
+3.3V
SV3-3
+5V
SV3-2
USB B
+5V
DATA+
DATA-
GND
P1
750mA
+5V
VBUS
D+
D-
GPIO0-TXT
GPIO1-RXT
SV2-3
SV4-1
SV4-3
GPIO2
GPIO3
SV5-1
SV5-2
GPIO4
SV5-3
GPIO5
SV5-4
GPIO6
SV5-5
GPIO7-CLK
X1
CP2112
470R
R4
D2
CERVENA
SV4-2
470R
R3
D3
CERVENA
R1
470R
D1
ZELENA
D4
SP1001-04XTG
SV6-1
SV6-2
SV6-3