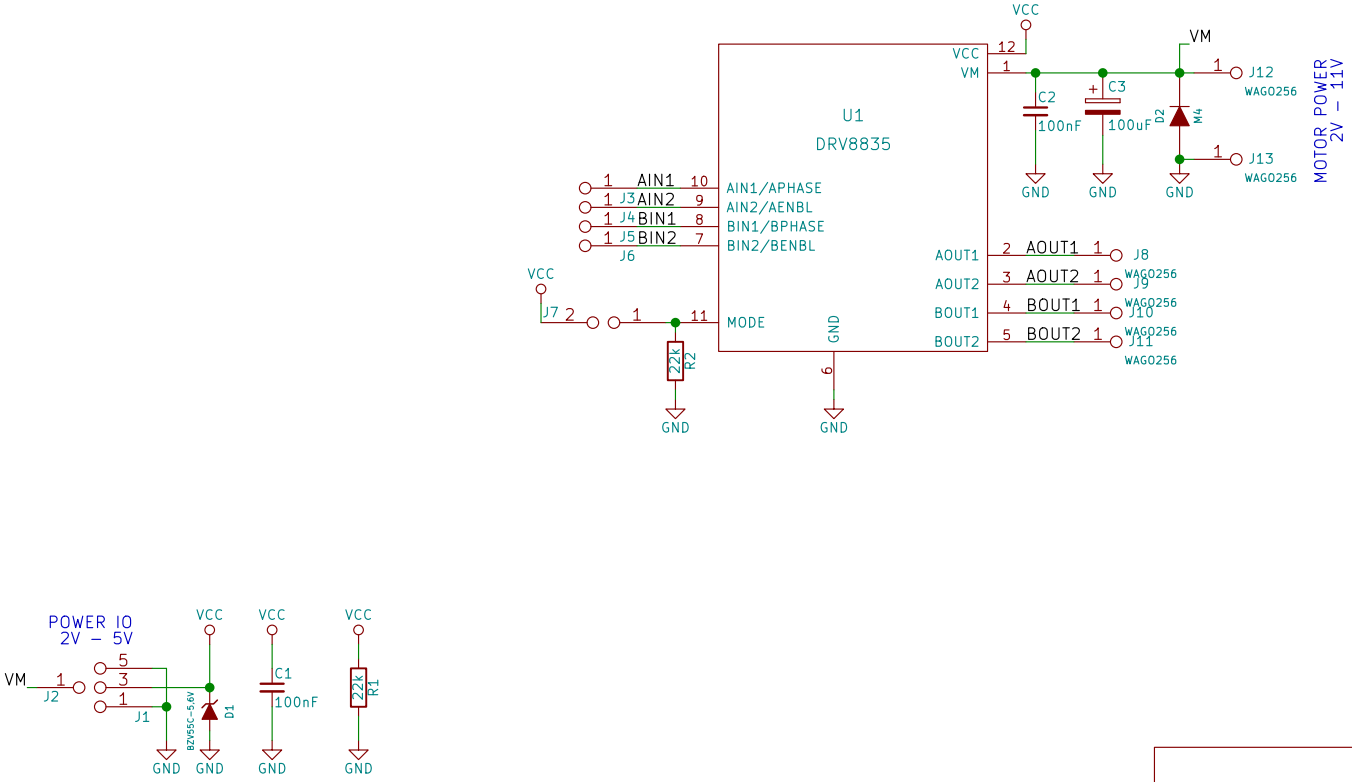


Sheet: /
File: DRV8835HB01B.sch

**Title:**

| Size: A4 | Date: | Rev: |
|---|---|---|
| KiCad E.D.A. kicad (2015-05-13 BZR 5653)-product | | Id: 1/1 |