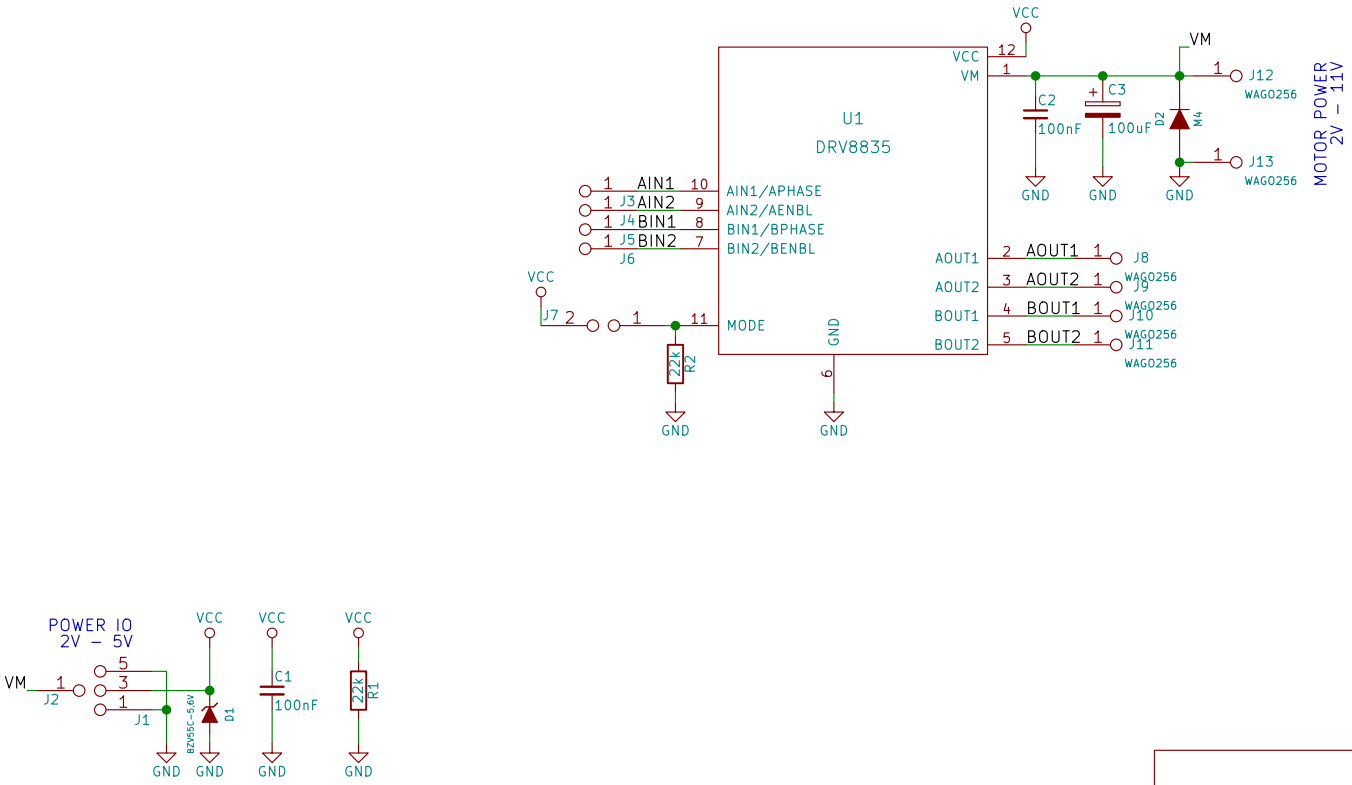

Sheet: /
File: DRV8835HB01B.sch

Title:

Size: A4	Date:	Rev:
KiCad E.D.A. kicad (2015-12-20 BZR 6390, Git 4e99c98)-product		Id: 1/1