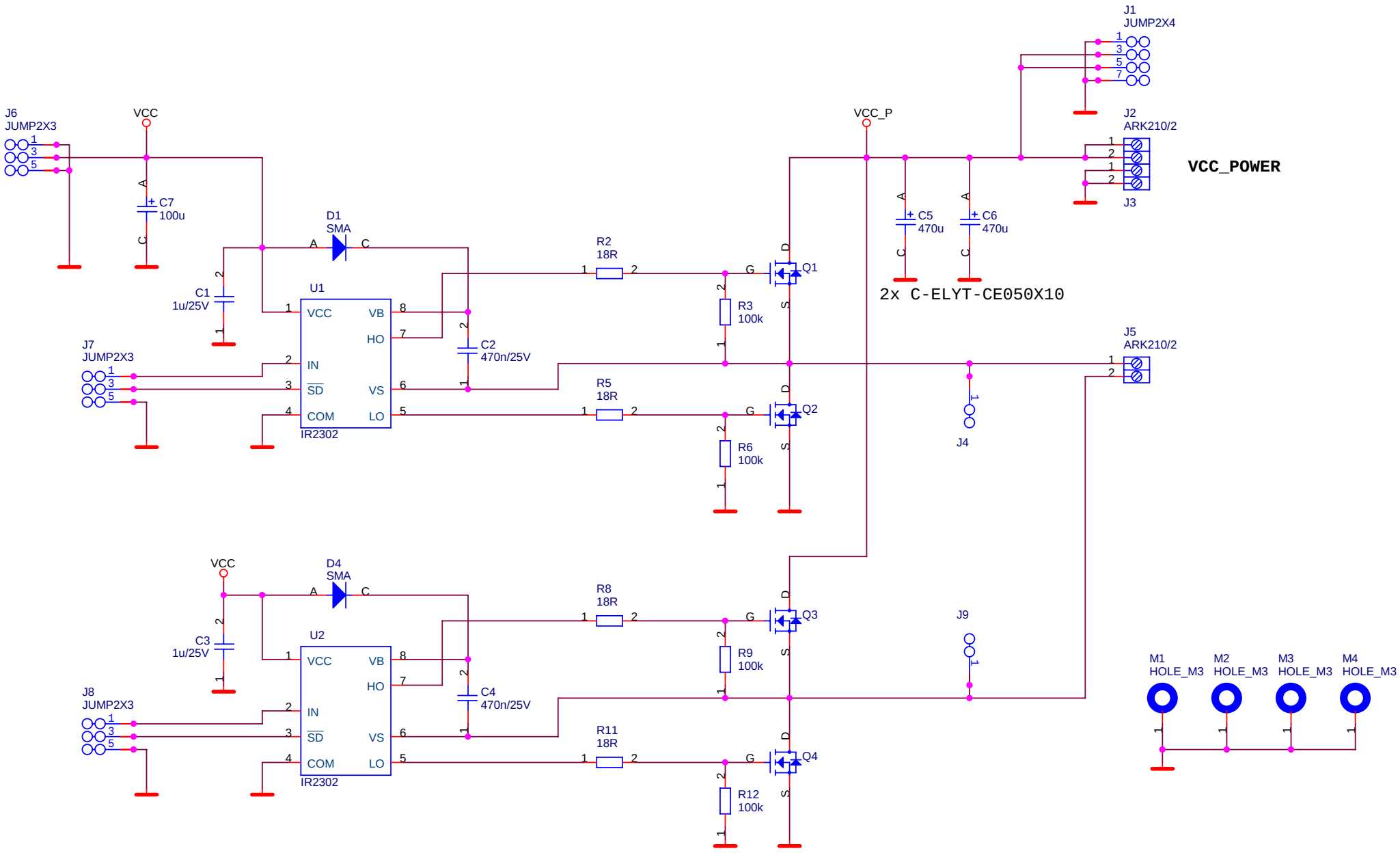

Title	IR 2302 H-Bridge	
Size A4	Document Number IR2302	Rev 1.1
Date: Friday, July 20, 2012	Sheet 1 of 1	