Generated by Foxit PDF Creator © Foxit Software
http://www.foxitsoftware.com For evaluation only.

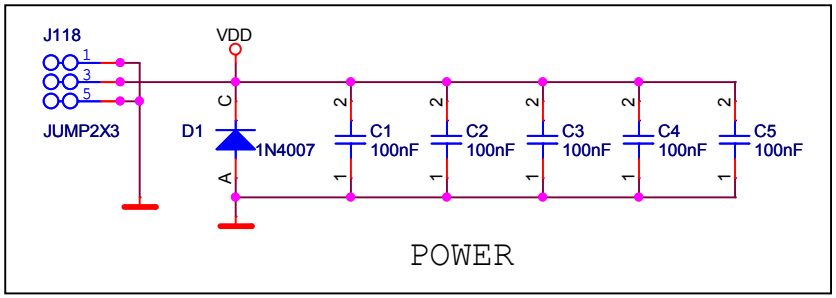

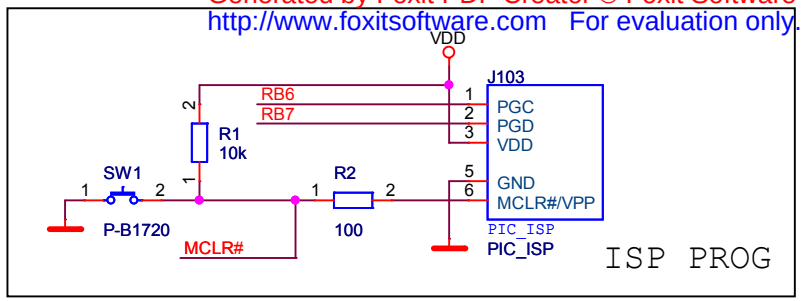

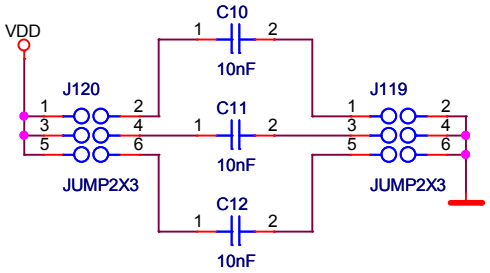

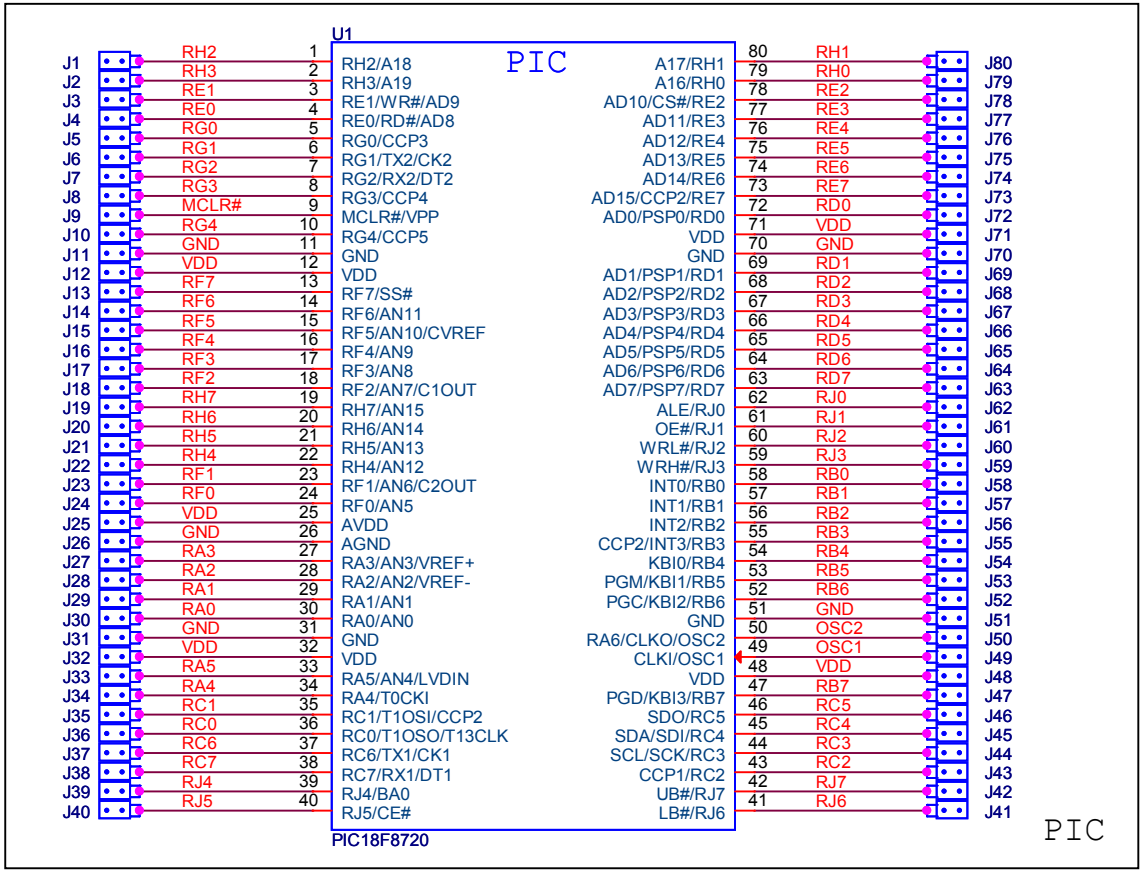

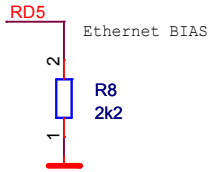

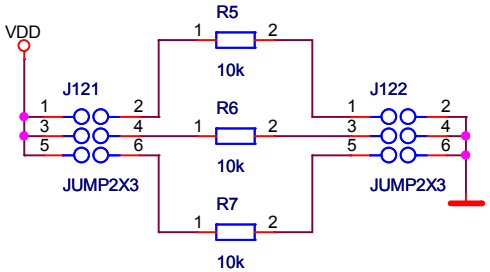

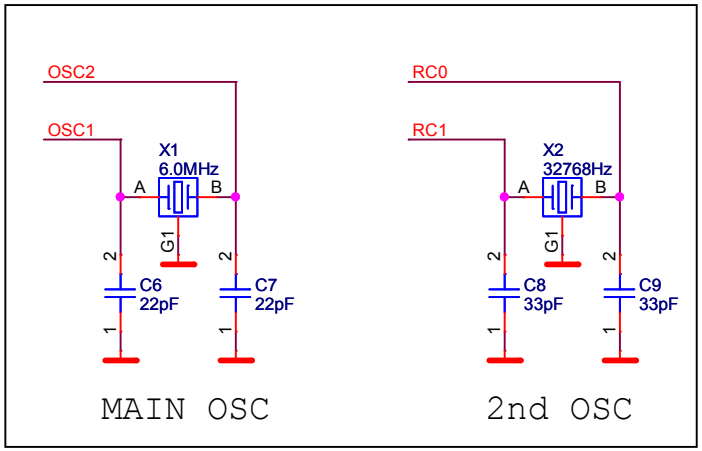

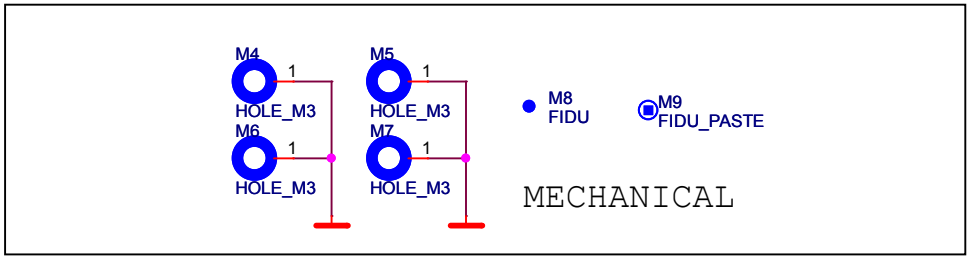

Firma		Author
MLAB		KAKLIK
Size A4	Project Name PIC	Schematic Name PIC18F8xTQ80	Rev 01A
Date: Monday, November 01, 2010	Sheet 2 of 2	