Generated by Foxit PDF Creator © Foxit Software
http://www.foxitsoftware.com For evaluation only.

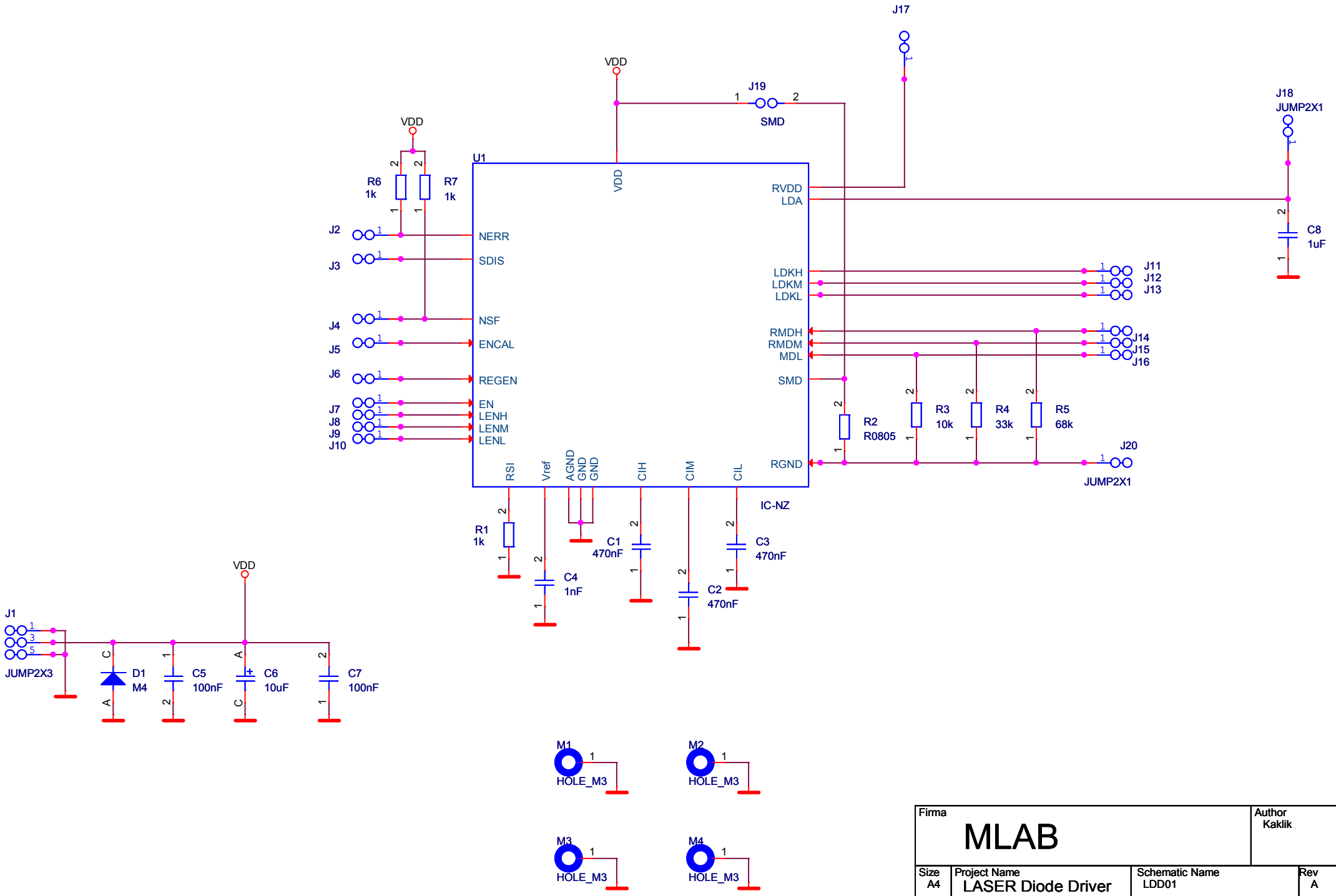

Firma			Author
MLAB			Kaklik
Size A4	Project Name LASER Diode Driver	Schematic Name LDD01	Rev A
Date: Sunday, June 03, 2012		Sheet 1 of 1	