Generated by Foxit PDF Creator © Foxit Software
http://www.foxitsoftware.com For evaluation only.

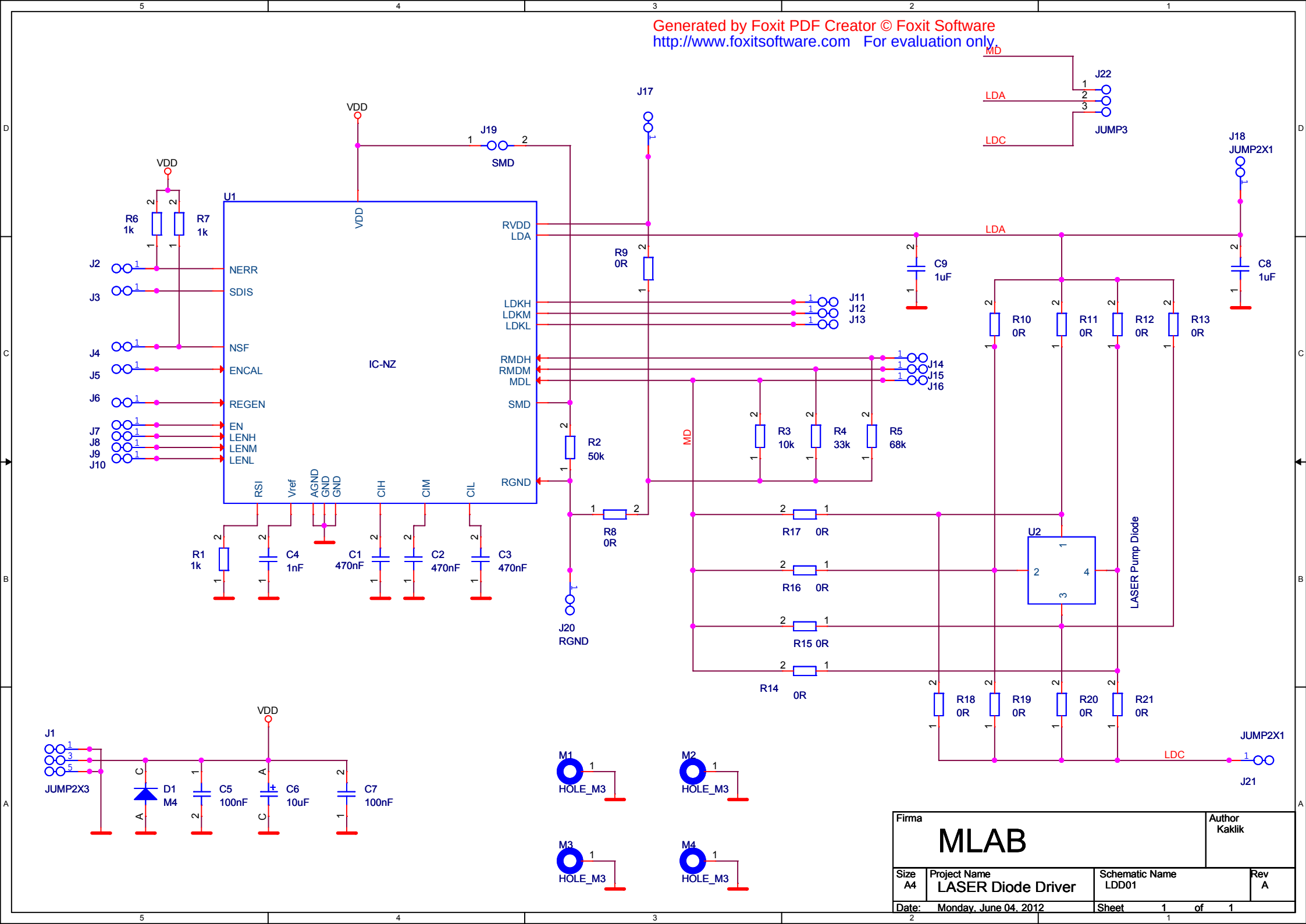

Firma		Author
MLAB		Kaklik
Size A4	Project Name LASER Diode Driver	Schematic Name LDD01	Rev A
Date: Monday, June 04, 2012	Sheet 1 of 1	