LION1CELL01A MLAB JACHO

Charge

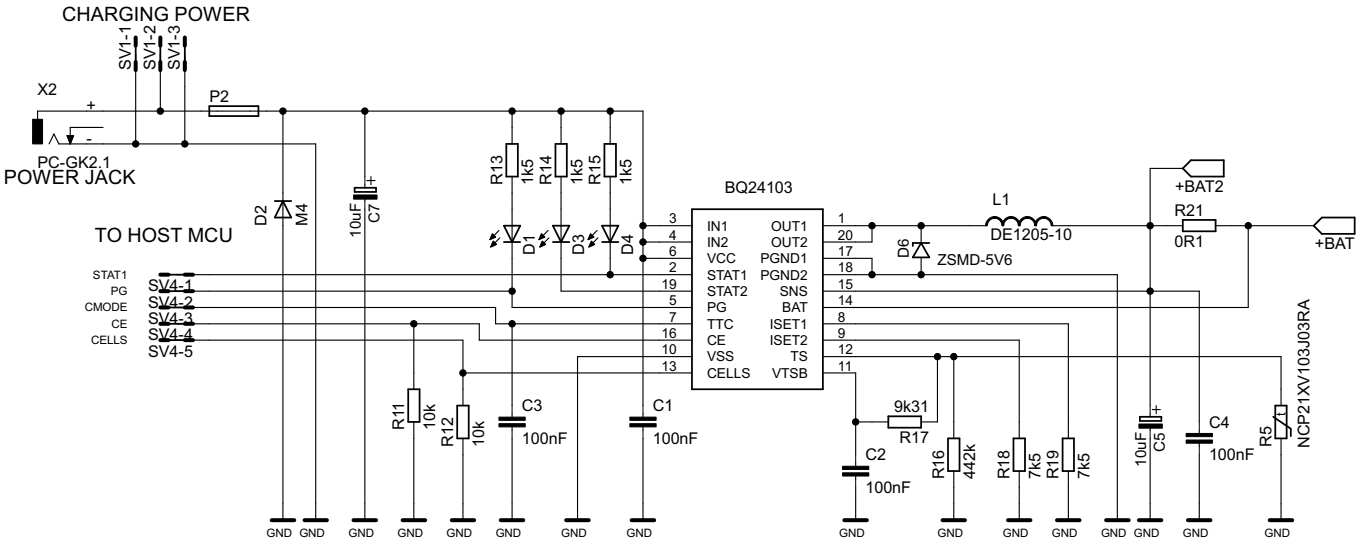

Fuel Gauge with Impedance Track

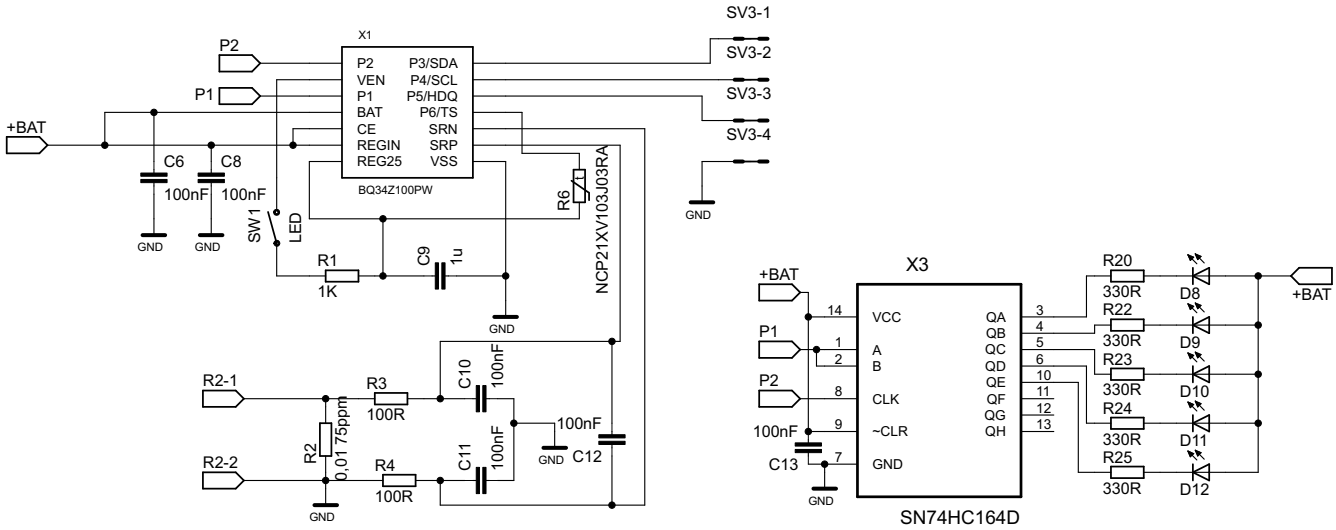

Protector

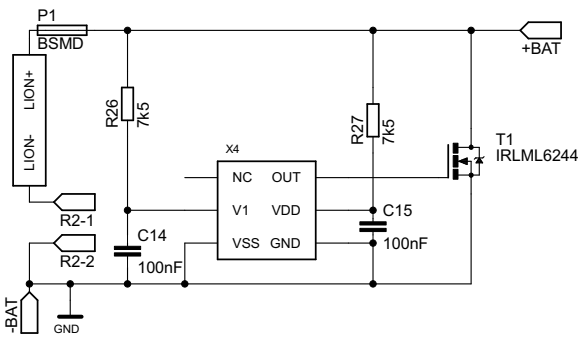
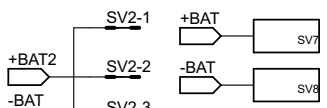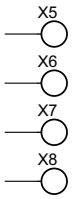
Output