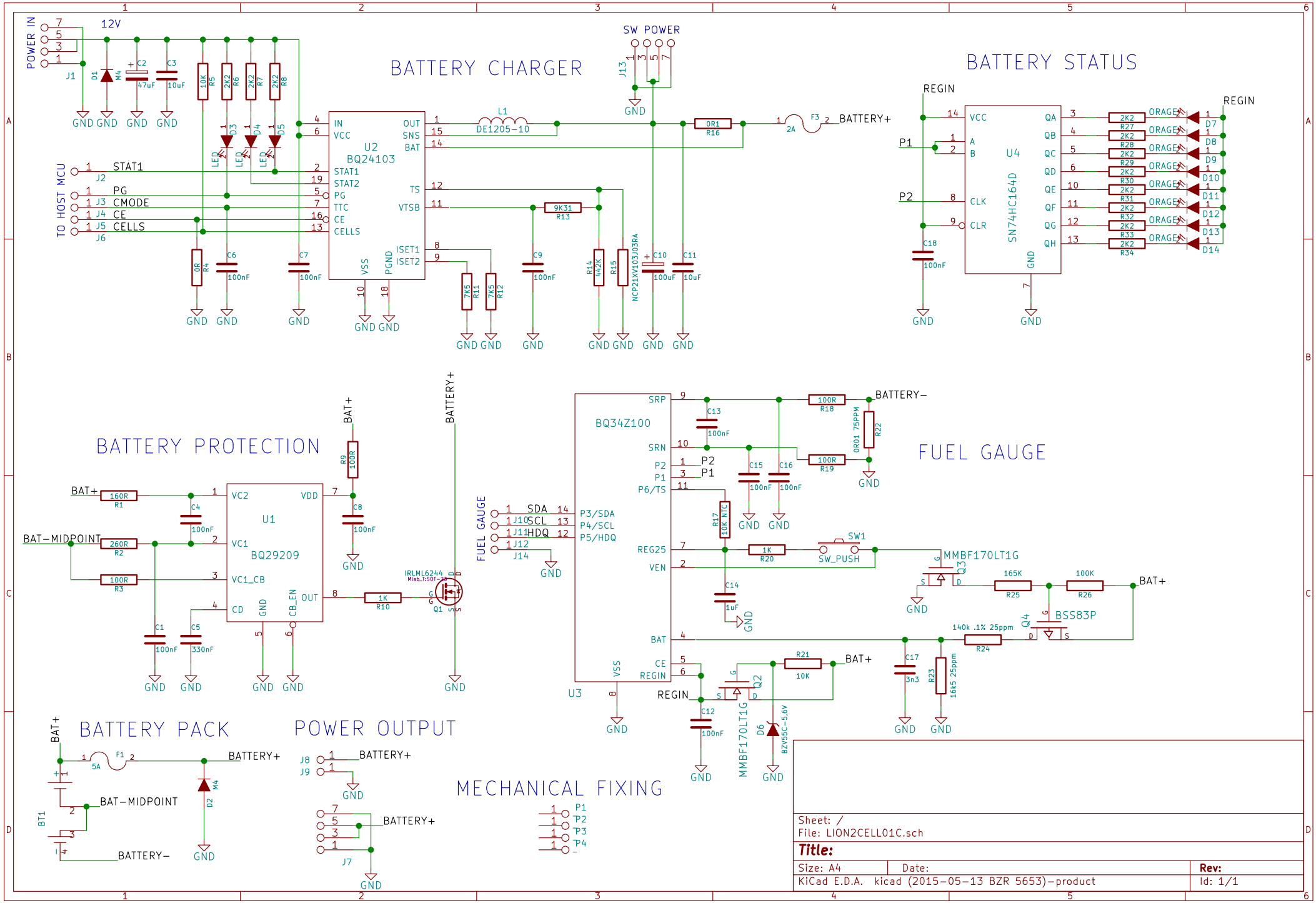
BATTERY CHARGER
BATTERY STATUS
BATTERY PROTECTION
FUEL GAUGE
BATTERY PACK
POWER OUTPUT
MECHANICAL FIXING
POWER IN
12V
SW POWER
TO HOST MCU
STAT1
PG
CMODE
CE
CELLS
U2
BQ24103
L1
DE1205-10
BATTERY+
BATTERY-
REGIN
U4
SN74HC164D
ORAGE
BAT+
BAT-MIDPOINT
U1
BQ29209
IRLML6244
FUEL GAUGE
SDA
SCL
HDQ
U3
BQ34Z100
SW_PUSH
MMBF170LT1G
BSS83P
BZV55C-5.6V
GND
Sheet: /
File: LION2CELL01C.sch
Title:
Size: A4
Date:
Rev:
KiCad E.D.A. kicad (2015-05-13 BZR 5653)-product
Id: 1/1