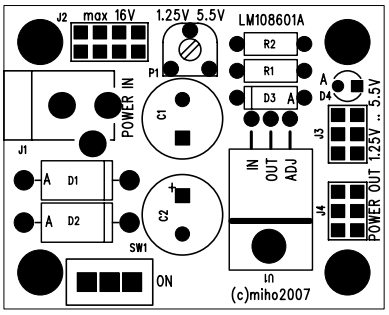
J2
max 16V
1.25V 5.5V
LM108601A
R2
R1
D3
A
P1
D4
POWER IN
C1
J3
J1
D1
D2
IN
OUT
ADJ
J4
POWER OUT 1.25V .. 5.5V
C2
SW1
ON
U1
(c)miho2007

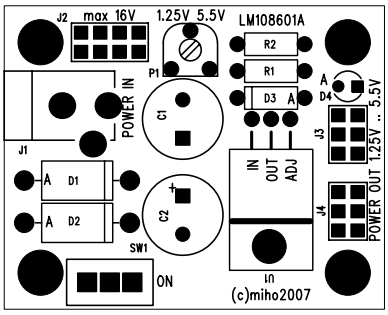
J2
max 16V
1.25V 5.5V
LM108601A
R2
R1
D3
A
P1
D4
POWER IN
C1
J3
J1
D1
D2
IN
OUT
ADJ
J4
POWER OUT 1.25V .. 5.5V
C2
SW1
ON
U1
(c)miho2007

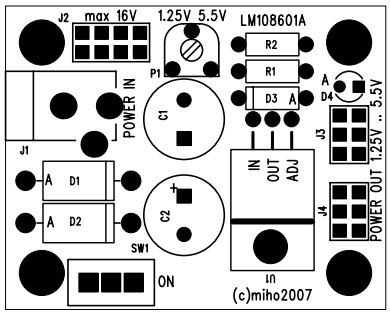
J2
max 16V
1.25V 5.5V
LM108601A
R2
R1
D3
A
P1
D4
POWER IN
C1
J3
J1
D1
D2
IN
OUT
ADJ
J4
POWER OUT 1.25V .. 5.5V
C2
SW1
ON
U1
(c)miho2007

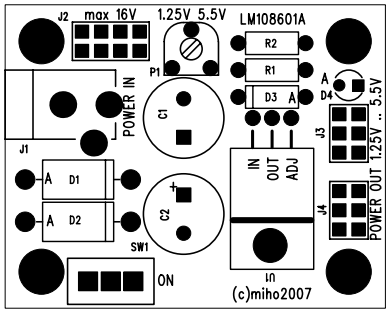
J2
max 16V
1.25V 5.5V
LM108601A
R2
R1
D3
A
P1
D4
POWER IN
C1
J3
J1
D1
D2
IN
OUT
ADJ
J4
POWER OUT 1.25V .. 5.5V
C2
SW1
ON
U1
(c)miho2007

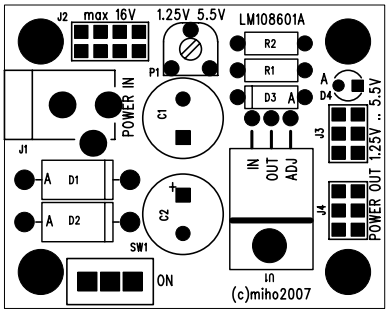
J2
max 16V
1.25V 5.5V
LM108601A
R2
R1
D3
A
P1
D4
POWER IN
C1
J3
J1
D1
D2
IN
OUT
ADJ
J4
POWER OUT 1.25V .. 5.5V
C2
SW1
ON
U1
(c)miho2007

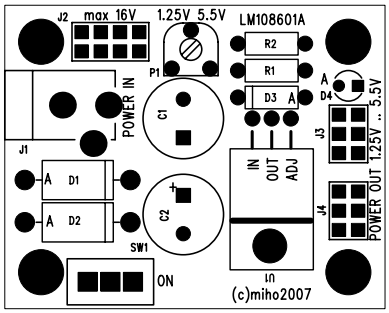
J2
max 16V
1.25V 5.5V
LM108601A
R2
R1
D3
A
P1
D4
POWER IN
C1
J3
J1
D1
D2
IN
OUT
ADJ
J4
POWER OUT 1.25V .. 5.5V
C2
SW1
ON
U1
(c)miho2007

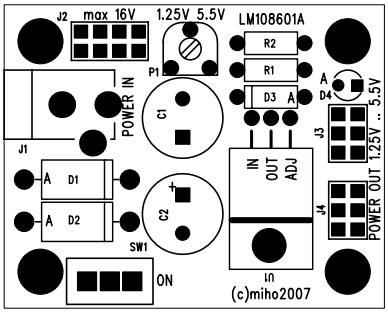
J2
max 16V
1.25V 5.5V
LM108601A
R2
R1
D3
A
P1
D4
POWER IN
C1
J3
J1
D1
D2
IN
OUT
ADJ
J4
POWER OUT 1.25V .. 5.5V
C2
SW1
ON
U1
(c)miho2007

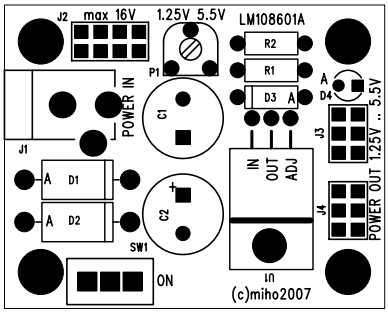
J2
max 16V
1.25V 5.5V
LM108601A
R2
R1
D3
A
P1
D4
POWER IN
C1
J3
J1
D1
D2
IN
OUT
ADJ
J4
POWER OUT 1.25V .. 5.5V
C2
SW1
ON
U1
(c)miho2007

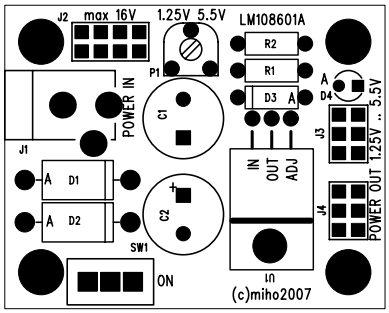
J2
max 16V
1.25V 5.5V
LM108601A
R2
R1
D3
A
P1
D4
POWER IN
C1
J3
J1
D1
D2
IN
OUT
ADJ
J4
POWER OUT 1.25V .. 5.5V
C2
SW1
ON
U1
(c)miho2007