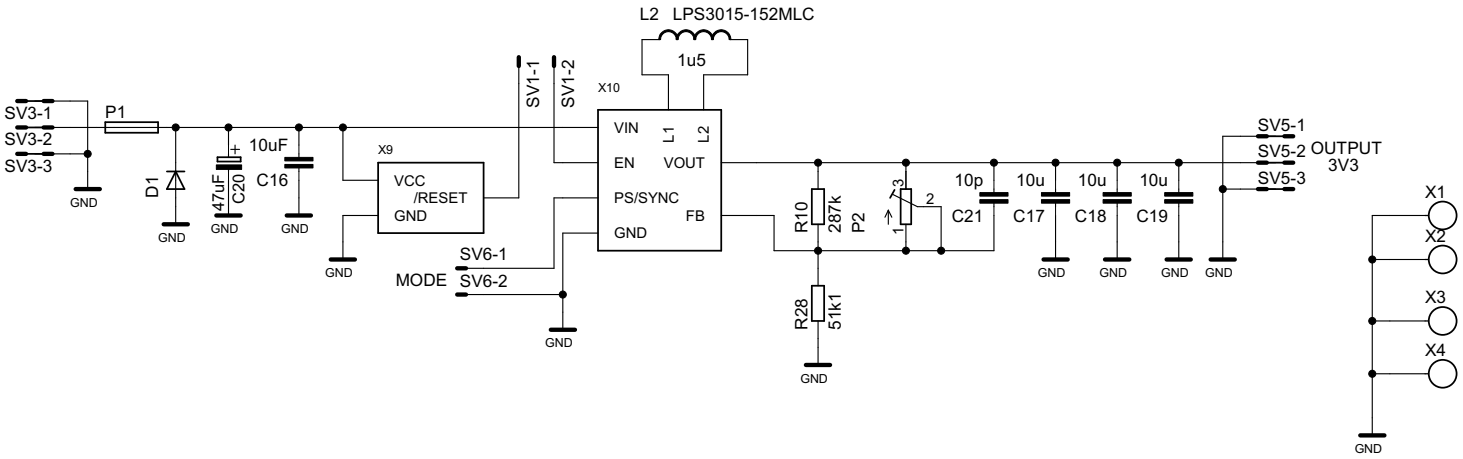
L2 LPS3015-152MLC
1u5
SV3-1
SV3-2
SV3-3
P1
GND
D1
47uF
C20
10uF
C16
X9
VCC
/RESET
GND
SV1-1
SV1-2
X10
VIN
L1
L2
EN
VOUT
PS/SYNC
FB
GND
SV6-1
MODE
SV6-2
R10
287k
P2
R28
51k1
10p
C21
C17
C18
C19
SV5-1
SV5-2
SV5-3
OUTPUT
3V3
X1
X2
X3
X4