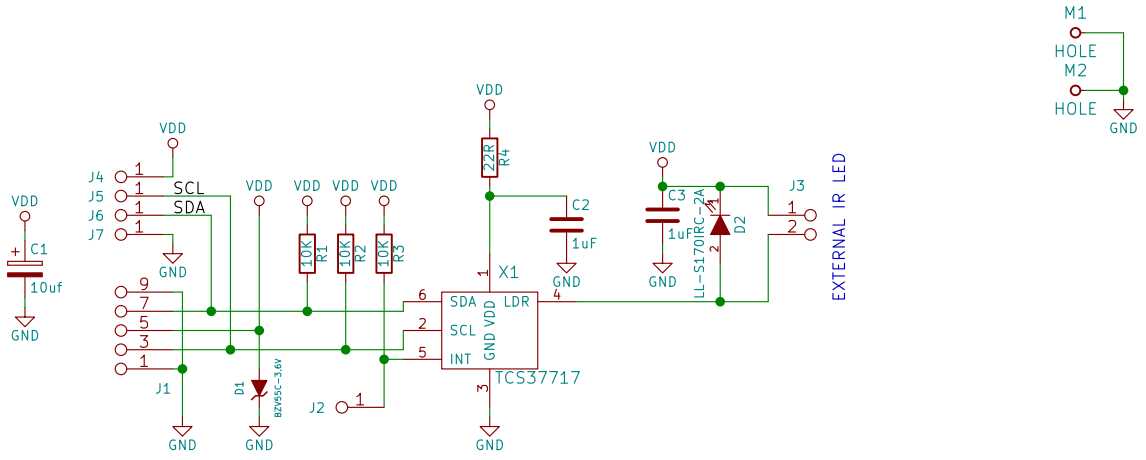

Sheet: /
File: RGBC01A.sch

Title:

Size: A4	Date:	Rev:
KiCad E.D.A. kicad (2015-05-13 BZR 5653)-product		Id: 1/1