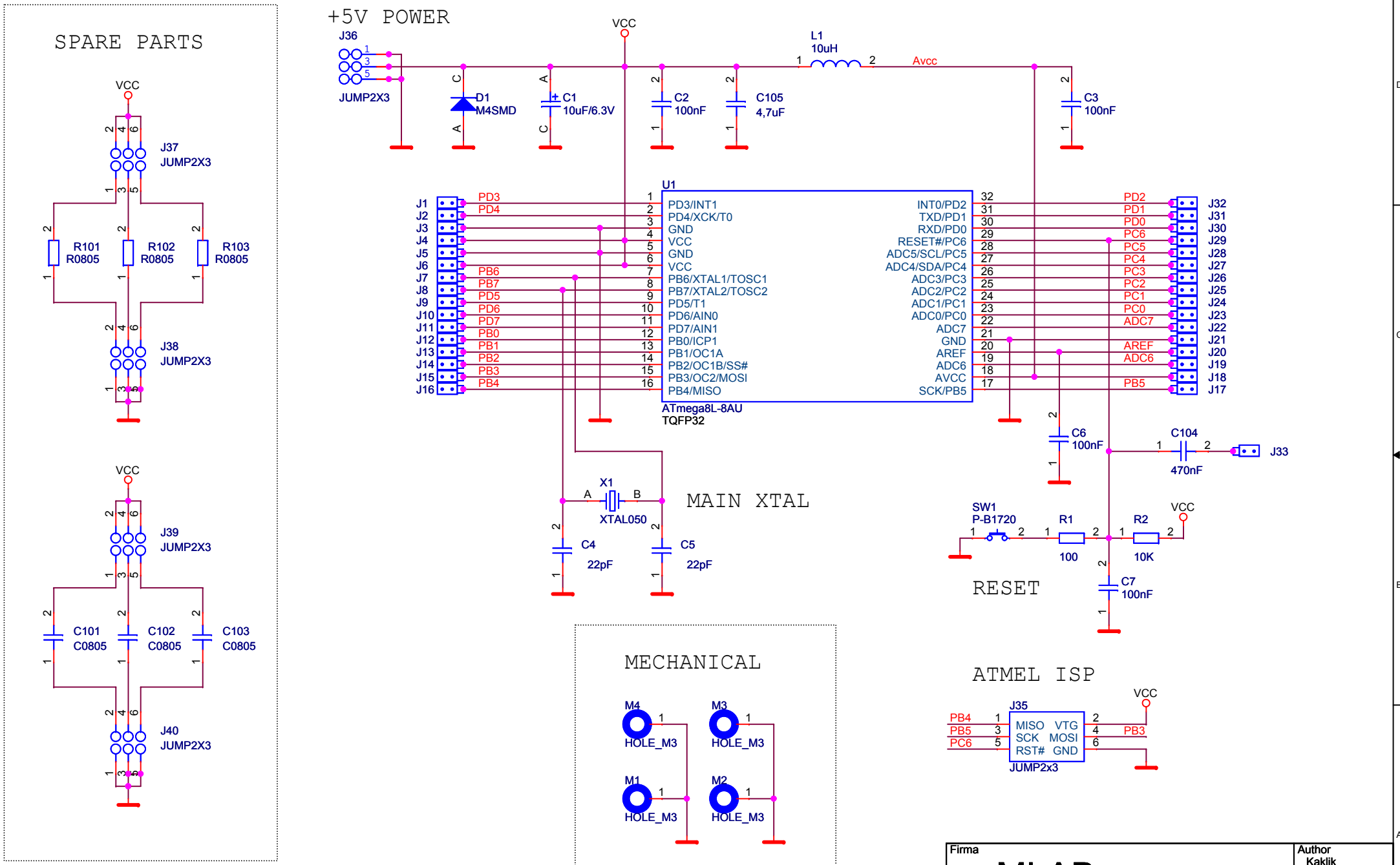

Firma		Author
MLAB		Kaklik
Size A4	Project Name MLAB	Schematic Name ATmegaTQ3201A	Rev 1.00
Date: Tuesday, September 20, 2011	Sheet 2 of 2	