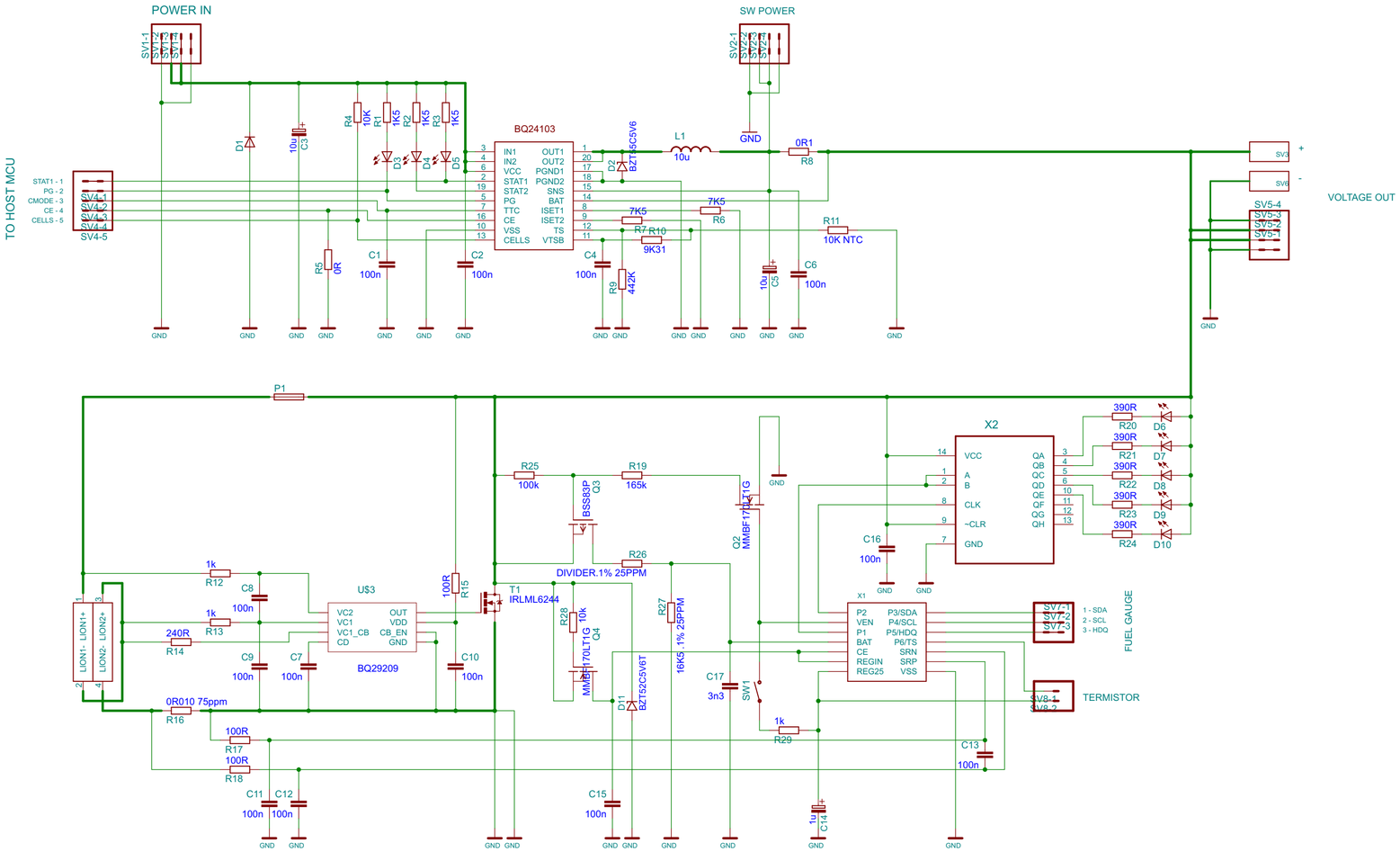
POWER IN
SW POWER
TO HOST MCU
STAT1 - 1
PG - 2
CMODE - 3
CE - 4
CELLS - 5
BQ24103
IN1
IN2
VCC
STAT1
STAT2
PG
TTC
CE
VSS
CELLS
OUT1
OUT2
PGND1
PGND2
SNS
BAT
ISET1
ISET2
TS
VTSB
L1
10u
0R1
R8
7K5
R6
R7 R10
9K31
R11
10K NTC
R9
442K
C1
100n
C2
100n
C4
100n
C6
100n
C3
10u
R5
0R
D1
D2
BZT.SC5V6
D3
D4
D5
R1
10K
R2
1K5
R3
1K5
R4
1K5
GND
VOLTAGE OUT
SV5-4
SV5-3
SV5-2
SV5-1
P1
X2
VCC
A
B
CLK
~CLR
GND
QA
QB
QC
QD
QE
QF
QG
QH
R20
R21
R22
R23
R24
390R
D6
D7
D8
D9
D10
C16
100n
R25
100k
R19
165k
R26
DIVIDER.1% 25PPM
BSS83P
Q3
Q2
MMBF170LT1G
R12
1k
R13
1k
R14
240R
C8
100n
C9
100n
C7
100n
C10
100n
U$3
VC2
VC1
VC1_CB
CD
OUT
VDD
CB_EN
GND
BQ29209
LION1- LION1+
LION2- LION2+
R15
100R
T1
IRLML6244
R28
10k
Q4
MMBF170LT1G
R27
16K5 .1% 25PPM
D11
BZT52C5V6T
C17
3n3
SW1
R29
1k
X1
P2
VEN
P1
BAT
CE
REGIN
REG25
P3/SDA
P4/SCL
P5/HDQ
P6/TS
SRN
SRP
VSS
SV7-1
SV7-2
SV7-3
1 - SDA
2 - SCL
3 - HDQ
FUEL GAUGE
SV8-1
SV8-2
TERMISTOR
C13
100n
R16
0R010 75ppm
R17
100R
R18
100R
C11
100n
C12
100n
C15
100n
C14
1u